SolarFlare

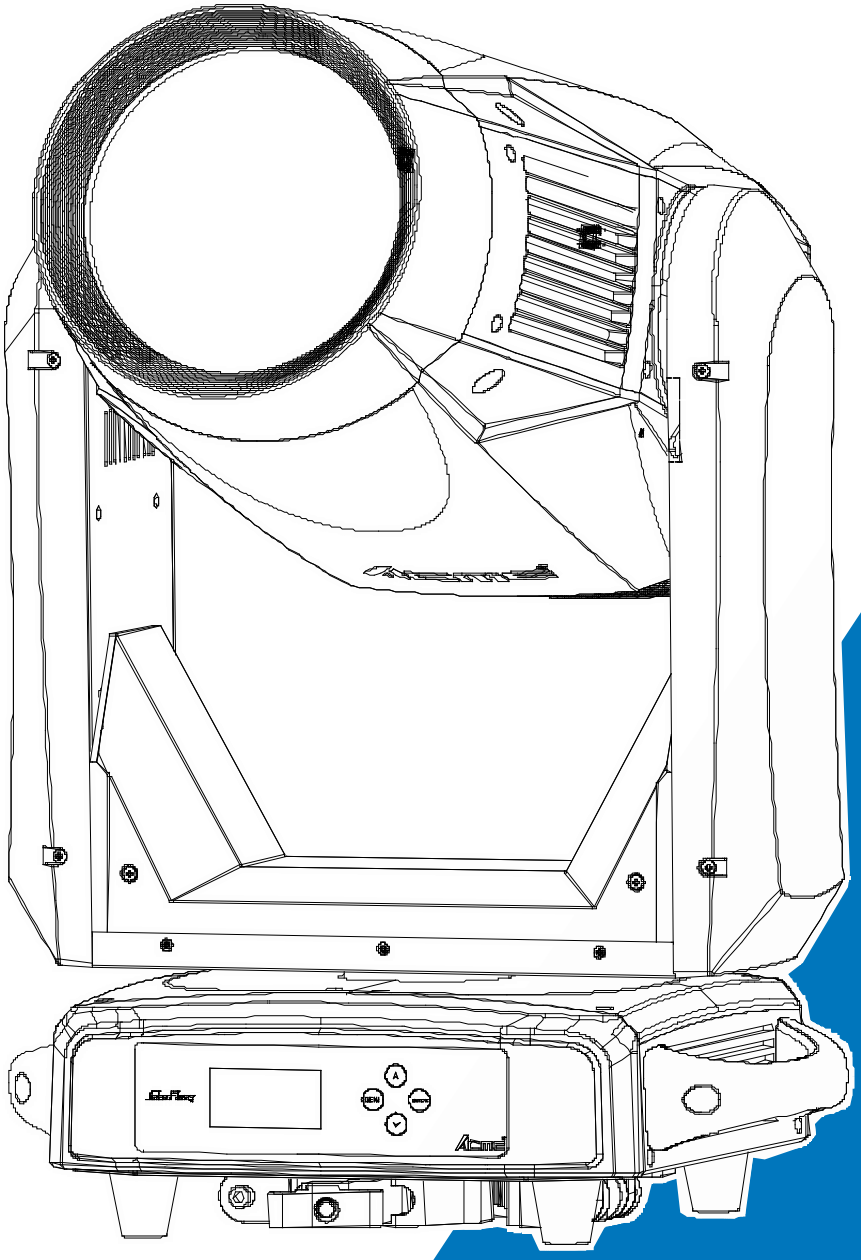

Intertek
5000057

User Manual

Please read the instruction carefully before use

CONTENTS

1. Safety Instructions 2
2. Technical Specifications 4
3. Control Panel 6
4. Color/Gobo 7
5. How To Set The Unit 7
5.1 Main Function 7
5.2 Home Position Adjustment 15
6. Control By Universal DMX Controller 20
6.1 DMX512 Connection 20
6.2 Address Setting 21
6.3 DMX512 Configuration 22
7. Error Information 33
8. Troubleshooting 36
9. Fixture Cleaning 37

1. Safety Instructions

Please read the instruction carefully which includes important information about the installation, usage and maintenance.

WARNING

Please keep this User Guide for future consultation. If you sell the unit to another user, be sure that they also receive this instruction manual.

Important:

Damages caused by the disregard of this user manual are not subject to warranty. The dealer will not accept liability for any resulting defects or problems.

- Unpack and check carefully that there is no transportation damage before using the unit.
- This product is for indoor use only. Use only in a dry location.
- DO install and operate by qualified operator.
- DO NOT allow children to operate the fixture.
- Use safety chain when fixing the unit. Handle the unit by carrying its base instead of head only.
- The unit must be installed in a location with adequate ventilation, at least 50cm from adjacent surfaces.
- Be sure that no ventilation slots are blocked, otherwise the unit will be overheated.
- Before operating, ensure that the voltage and frequency of power supply match the power requirements of the unit.
- It's important to ground the yellow/green conductor to earth in order to avoid electric shock.
- Minimum ambient temperature TA: 0℃. Maximum ambient temperature TA: 40℃.
- DO NOT connect the device to any dimmer pack.
- During initial start-up some smoke or smell may arise. This is a normal process and does not necessarily mean that the device is defective, and it will decrease gradually within 15 minutes.
- Make sure there are no flammable materials close to the unit while operating to avoid fire hazard.
- Examine the power wires carefully; replace them immediately if there is any damage.
- Unit's surface temperature may reach up to 75℃. DO NOT touch the housing bare-handed during its operation.
- Avoid any inflammable liquids, water or metal objects entering the unit. Once it happens, cut

off the mains power immediately.

- DO NOT operate in dirty or dusty environment, do clean fixtures regularly.
- DO NOT touch any wire during operation as there might be a hazard of electric shock.
- Avoid power wires together twist other cables.
- The minimum distance between light output and the illuminated surface must be more than 3 meters.
- In the event of serious operating problem, stop using the unit immediately.
- Never turn on and off the unit time after time.
- The housing, the lenses, or the ultraviolet filter must be replaced if they are visibly damaged.
- DO NOT open the unit as there are no user serviceable parts inside.
- Never try to repair the unit by yourself. Repairs carried out by unskilled people can lead to damage or malfunction. Please contact the nearest authorized technical assistance center if needed.
- Disconnect the mains power if the fixture is has not been used for a long time.
- DO use the original packing materials before transporting it again.
- DO NOT look directly at the light while the LED is on.
- DO NOT start on the unit without LED enclosure or when housing is damaged.

Installation:

The fixture should be mounted via its Omega Quick Release Clamp bracket. Always ensure that the unit is firmly fixed to avoid vibration and slipping while operating and make sure that the structure to which you are attaching the unit is secure and is able to support a weight of 10 times of the fixtures weight. Always use a safety cable that can hold 12 times of the weight of the fixture when installing.

The equipment must be installed by professionals. It must be installed in a place where is out of the reach of people and no one can pass by or under it.

2. Technical Specifications

Power Voltage:

AC 100~240V, 50/60Hz

Power Consumption:

1370W

Light Source:

SUL1000X

Color temperature:

6500K

Beam Angle:

5°→ 50°

CRI:

Ra>70

Ra>90: Switch to high CRI mode with high CRI filter (Setting in 17channel of 34/25CH, 12channel of 29/20CH)

Prism:

4 facet prism rotating in both directions

Movement:

Pan: 540°

Tilt: 270°

Pan/Tilt Resolution: 16 bit

Fixation: Pan/Tilt lock

Color Wheel:

1 color wheel with 5 colors plus white

Gobo Wheel:

1 static gobo wheel with 8 gobos plus open

1 rotating gobo wheel with 6 gobos plus open, easy to replace

Control:

DMX Channel: 34/25/29/20 channels

Control Mode: DMX512, Art-Net, RDM

Firmware Upgrade: Update via DMX link

Construction:

Display: LCD display

Battery backup for user setup without mains connection

Data In/Out: 3-pin and 5-pin XLR

Power In/Out: PowerCON in

Protection Rating: IP20

Features:

Linear CMY color mixing + Linear CTO color correction

2 new material frost filters (mild & moderate), effectively improve the brightness under frost mode

Motorized linear iris

4 fast and smooth framing shutters, each shutter blade position and angle can be controlled individually; Each shutter blade can block out light completely, the framing module can be rotated at ± 45°

Dimension/Weight:

465x352x836mm, 46.3kgs

18.3"x13.9”x32.9"in, 102.1lbs

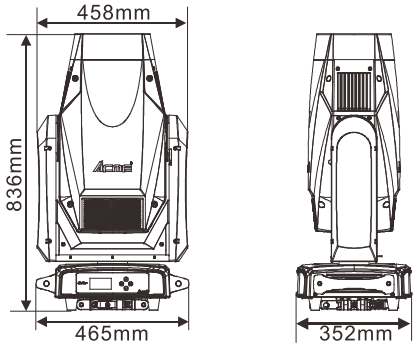

Photometrics Diagram:

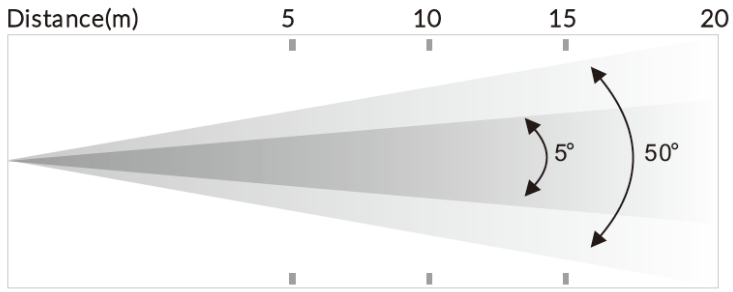

5° Lux	85000	20750	9950	5940
Diameter(m)	0.4	0.8	1.3	1.7
50° Lux	2257	660	300	141
Diameter(m)	4.7	9.3	13.9	18.6

3. Control Panel

Wire Version:

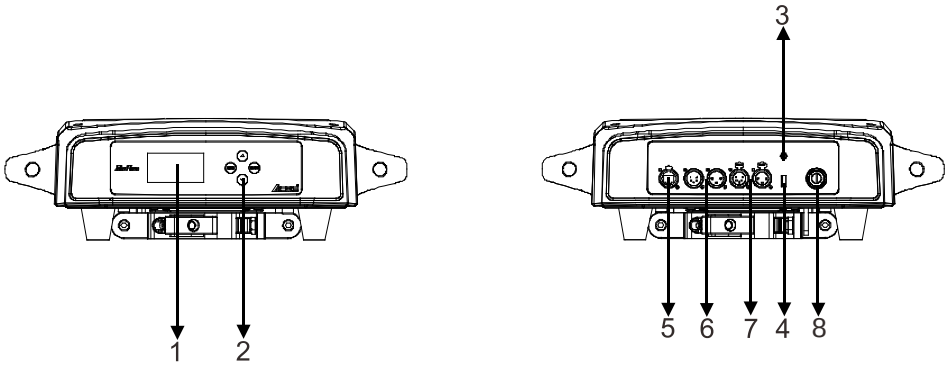

Powercon Version:

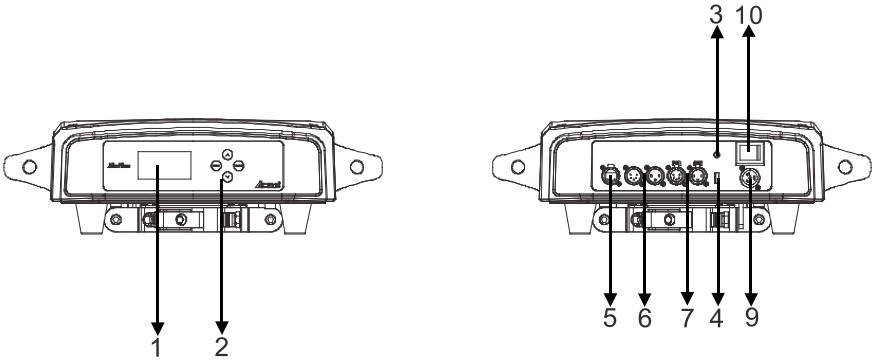

1. Display: To show the various menus and the selected function

2. Button:

MENU	To enter into move backward or leave the menu
UP	To go backward to move up in the menu
DOWN	To go forward to move down in the menu
ENTER	To perform the desired functions

3. BATTERY DISPLAY

4. Firmware Upgrade(USB Slot): Used to upgrade the unit firmware

5. ETHERNET: Transfers fixture's information to a main controller

6. DMX IN: For DMX512 operation, use 3/5-pin XLR plug cable to link the units together

7. DMX OUT: For DMX512 operation, use 3/5-pin XLR plug cable to link the units together

8. POWER (Wire Version): To connect to the mains supply

9. POWER (Powercon Version): To connect to the mains supply

10. POWER SWITCH (Powercon Version): Turns on/ off the power

4. Color/Gobo

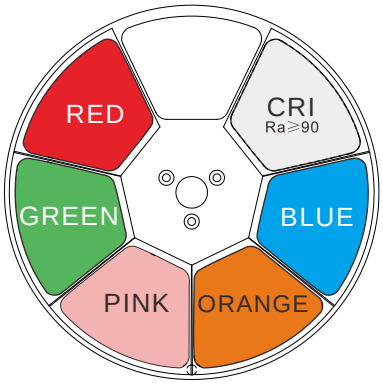

COLOR WHEEL

STATIC GOBO WHEEL

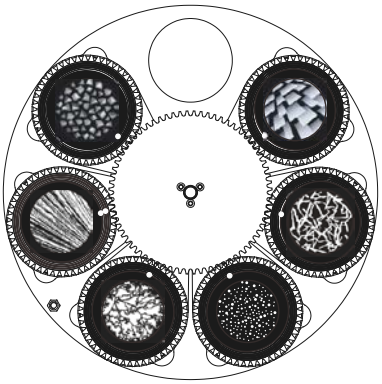

ROTATING GOBO WHEEL

DANGER!
Install the color wheel/gobo wheel with the device switched off only.
Unplug from mains before changing the color wheel/gobo wheel!

CAUTION: Never unscrew the screws of the rotating gobo as the ball bearing will otherwise be opened!

5. How To Set The Unit

5.1 Main Function

Turn on the unit, press the **MENU** button into menu mode, and press the **UP/DOWN** button until the required function is shown on the monitor. Select the function by the **ENTER** button. Use the **UP/DOWN** button to choose the submenu, press the **ENTER** button to store and automatically return to the last menu. Press the **MENU** button or let the unit idle 30 seconds to exit menu mode. The main functions are shown below:

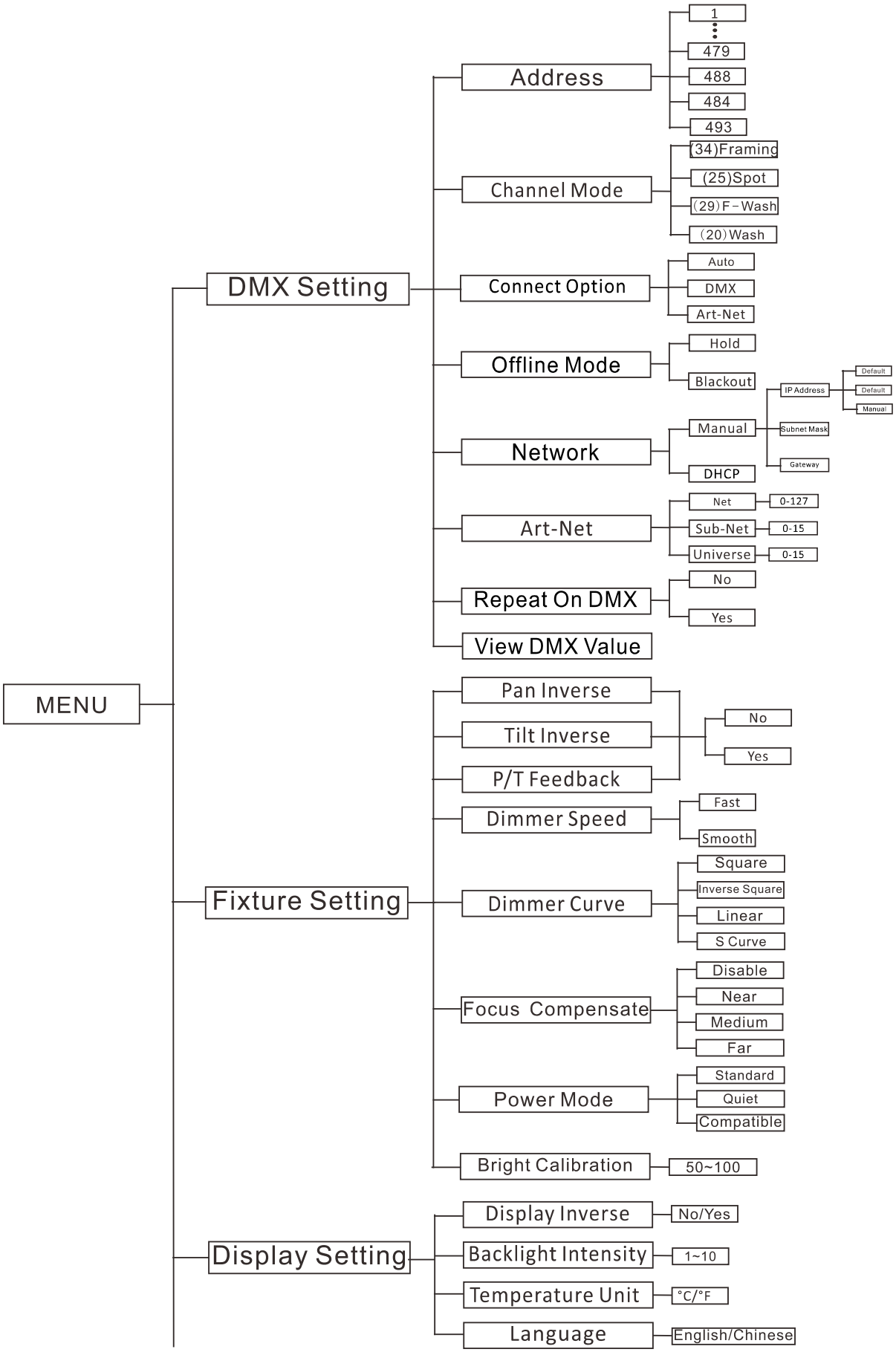
MENU
DMX Setting
Address
1
479
488
484
493
Channel Mode
(34)Framing
(25)Spot
(29)F-Wash
(20)Wash
Connect Option
Auto
DMX
Art-Net
Offline Mode
Hold
Blackout
Network
Manual
IP Address
Default
Default
Manual
Subnet Mask
Gateway
DHCP
Art-Net
Net
0-127
Sub-Net
0-15
Universe
0-15
Repeat On DMX
No
Yes
View DMX Value
Fixture Setting
Pan Inverse
Tilt Inverse
P/T Feedback
No
Yes
Dimmer Speed
Fast
Smooth
Dimmer Curve
Square
Inverse Square
Linear
S Curve
Focus Compensate
Disable
Near
Medium
Far
Power Mode
Standard
Quiet
Compatible
Bright Calibration
50~100
Display Setting
Display Inverse
No/Yes
Backlight Intensity
1~10
Temperature Unit
°C/°F
Language
English/Chinese

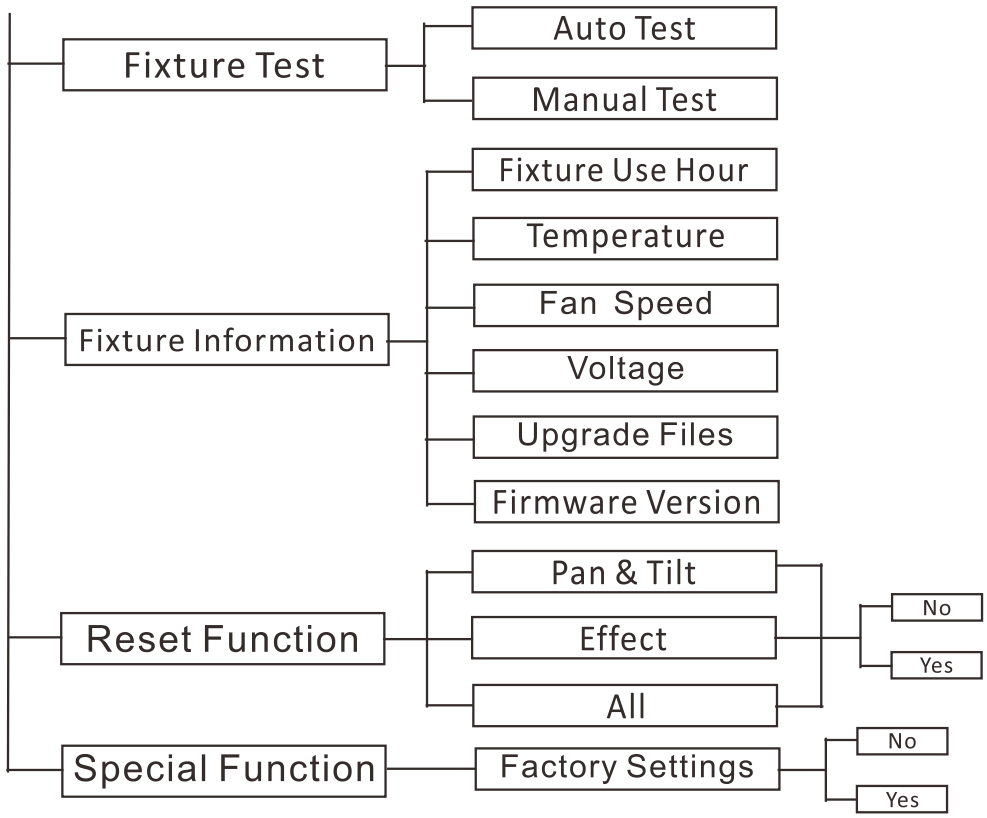

DMX Setting

To select **DMX Setting,** press the **ENTER** button to confirm, use the **UP/DOWN** button to select **Address**, **Channel Mode**, **Connect Option**, **Offline Mode**, **Network**, **Art-Net**, **Repeat On DMX** or **View DMX Value.**

Address

To select **Address**, press the **ENTER** button to confirm. Use the **UP/DOWN** button to adjust the address from **001** to **479/488/484/493**, press the **ENTER** button to store. Press the **MENU** button back to the last menu or let the unit idle 30 seconds to exit menu mode.

Channel Mode

To select **Channel Mode**, press the **ENTER** button to confirm. Use the **UP/DOWN** button to select **(34)Framing, (25)Spot, (29)F-Wash** or **(20)Wash**, press the **ENTER** button to store. Press the **MENU** button back to the last menu or let the unit idle 30 seconds to exit menu mode.

Connect Option

To select **Connect Option**, press the **ENTER** button to confirm. Use the **UP/DOWN** button to select **Auto**, **DMX** or **Art-Net**, press the **ENTER** button to store. Press the **MENU** button back to the last menu or let the unit idle 30 seconds to exit menu mode.

Offline Mode

To select **Offline Mode**, press the **ENTER** button to confirm. Use the **UP**/**DOWN** button to select **Hold** or **Blackout**, press the **ENTER** button to store. Press the **MENU** button back to the last menu or let the unit idle 30 seconds to exit menu mode.

Network

To select **Network**, press the **ENTER** button to confirm. Use the **UP**/**DOWN** button to select **Manual** or **DHCP**, press the **ENTER** button to store. To select **Manual**, press the **ENTER** button to confirm. Use the **UP**/**DOWN** button to select **IP Address, Subnet Mask** or **Gateway**, press the **ENTER** button to store. Press the **MENU** button back to the last menu or let the unit idle 30 seconds to exit menu mode.

Art-Net

To select **Art-Net**, press the **ENTER** button to confirm. Use the **UP**/**DOWN** button to select **Net**, **Sub-Net** or **Universe**, press the **ENTER** button to store. Press the **MENU** button back to the last menu or let the unit idle 30 seconds to exit menu mode.

Repeat On DMX

To select **Repeat On DMX**, press the **ENTER** button to confirm. Use the **UP**/**DOWN** button to select **No** or **Yes**, press the **ENTER** button to store. Press the **MENU** button back to the last menu or let the unit idle 30 seconds to exit menu mode.

View DMX Value

To select **View DMX Value**, press the **ENTER** button to confirm. Use the **UP**/**DOWN** button to view the DMX channel value. Press the **MENU** button back to the last menu or let the unit idle 30 seconds to exit menu mode.

Fixture Setting

To select **Fixture Setting**, press the **ENTER** button to confirm, use the **UP**/**DOWN** button to select **Pan Inverse, Tile Inverse, P/T Feedback**, **Dimmer Speed**, **Dimmer Curve, Focus Compensate, Power Mode** or **Bright Calibration.**

Pan Inverse

To select **Pan Inverse**, press the **ENTER** button to confirm. Use the **UP**/**DOWN** button to select **No** (normal) or **Yes** (pan inverse), press the **ENTER** button to store. Press the **MENU** button back to the last menu or let the unit idle 30 seconds to exit menu mode.

Tilt Inverse

To select **Tilt Inverse**, press the **ENTER** button to confirm. Use the **UP**/**DOWN** button to select **No** (normal) or **Yes** (tilt inverse), press the **ENTER** button to store. Press the **MENU** button back to the last menu or let the unit idle 30 seconds to exit menu mode.

P/T Feedback

To select **P/T Feedback**, press the **ENTER** button to confirm. Use the **UP**/**DOWN** button to select **No** (Pan or tilt's position will not feedback while out of step) or **Yes** (Feedback while pan/tilt out of step), press the **ENTER** button to store. Press the **MENU** button back to the last menu or let the unit idle 30 seconds to exit menu mode.

Dimmer Speed

To select **Dimmer Speed**, press the **ENTER** button to confirm. Use the **DOWN**/**UP** button to select **Fast** or **Smooth**, press the **ENTER** button to store. Press the **MENU** button back to the last menu or let the unit idle 30 seconds to exit menu mode.

Dimmer Curve

To select **Dimmer Curve**, press the **ENTER** button to confirm. Use the **DOWN**/**UP** button to select **Square, Inverse Square, Linear** or **S Curve**, press the **ENTER** button to store. Press the **MENU** button back to the last menu or let the unit idle 30 seconds to exit menu mode.

Dimmer Modes

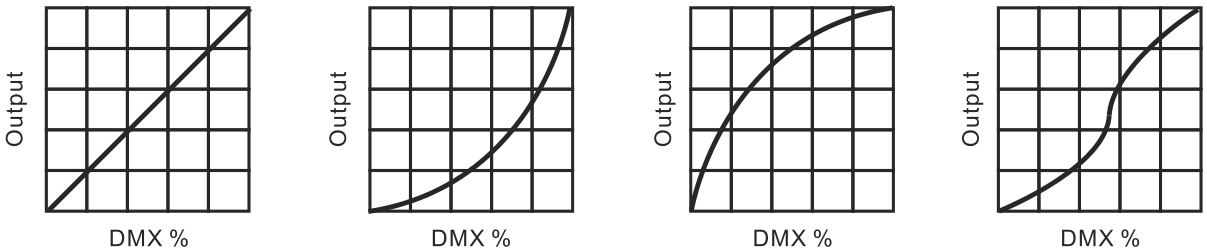

Optically Linear Square Law Inverse Square Law S-curve

Optically Linear: The increase in light intensity appears to be linear as DMX value is increased.

Square Law: Light intensity control is finer at low levels and coarser at high levels.

Inverse Square Law: Light intensity control is coarser at low levels and finger at high levels.

S-Curve: Light intensity control is finger at low levels and high levels and coarser at medium levels.

Focus Compensate

To select **Focus Compensate**, press the **ENTER** button to confirm. Use the **UP**/**DOWN** button to select **Disable, Near, Medium** or **Far**, press the **ENTER** button to store. Press the **MENU** button back to the last menu or let the unit idle 30 seconds to exit menu mode.

Power Mode

To select **Power Mode**, press the **ENTER** button to confirm. Use the **UP**/**DOWN** button to select **Standard**, **Quiet** or **Compatible**, press the **ENTER** button to store. Press the **MENU** button back to the last menu or let the unit idle 30 seconds to exit menu mode.

Bright Calibration

Select **Bright Calibration**, press the **ENTER** button to confirm, present mode will blink on the display, use the **UP**/**DOWN** button to adjust the value from **50** to **100**, press the **ENTER** button to store. Press the **MENU** button back to the last menu or let the unit idle 30 seconds to exit menu mode.

Display Setting

Enter menu mode, select **Display Setting**, press the **ENTER** button to confirm, use the **UP**/**DOWN** button to select **Display Inverse, Backlight Intensity, Temperature Unit** or **Language.**

Display Inverse

Select **Display Inverse**, press the **ENTER** button to confirm, present mode will blink on the display, use the **UP**/**DOWN** button to select **No** (normal display) or **Yes** (inverse display), press the **ENTER** button to store. Press the **MENU** button back to the last menu or let the unit idle 30 seconds to exit menu mode.

Backlight Intensity

Select **Backlight Intensity**, press the **ENTER** button to confirm, present mode will blink on the display, use the **UP**/**DOWN** button to adjust the value from **1** to **10**, press the **ENTER** button to store. Press the **MENU** button back to the last menu or let the unit idle 30 seconds to exit menu mode.

Temperature Unit

Select **Temperature Unit**, press the **ENTER** button to confirm, present mode will blink on the display, use the **UP**/**DOWN** button to select ℃ or ℉, press the **ENTER** button to store. Press the **MENU** button back to the last menu or let the unit idle 30 seconds to exit menu mode.

Language

Select **Language**, press the **ENTER** button to confirm, present mode will blink on the display, use the **UP**/**DOWN** button to select **English** or **Chinese**. Press the **MENU** button back to the last menu or let the unit idle 30 seconds to exit menu mode.

Fixture Test

Enter menu mode, select **Fixture Test**, press the **ENTER** button to confirm, use the **UP**/**DOWN** button to select **Auto Test** or **Manual Test**

Auto Test

Select **Auto Test**, press the **ENTER** button to confirm, the unit will run built-in programs to automatically test pan, tilt, color, gobo, gobo rotation, prism, prism rotation, frost, iris, focus, zoom, etc. Press the **MENU** button back to the last menu or exit menu mode after auto test.

Manual Test

Select **Manual Test**, press the **ENTER** button to confirm, the present channel will show on the display, use the **UP**/**DOWN** button to select channel, press the **ENTER** button to confirm, then use the **UP** and **DOWN** button to adjust the value, press the **ENTER** button to store, the fixture will run as the channel value indicates. Press the **MENU** button back to the last menu or exit menu mode idling 30 seconds.

(All channels value will become 0 after exiting Manual Test menu)

Fixture Information

Enter menu mode, select **Fixture Information**, press the **ENTER** button to confirm, use the **UP**/**DOWN** button to select **Fixture Use Hour, Temperature, Fan Speed, Voltage, Upgrade Files** or **Firmware Version.**

Fixture Use Hour

Select **Fixture Use Hour**, press the **ENTER** button to confirm, fixture use time will show on the display, press the **MENU** button to exit.

Temperature

Select **Temperature**, press the **ENTER** button to confirm, fixture temperature will show on the display, press the **MENU** button to exit.

Fan Speed

Select **Fan Speed**, press the **ENTER** button to confirm, fan speed will show on the display, press the **MENU** button to exit.

Voltage

Select **Voltage**, press the **ENTER** button to confirm, fixture's voltage will show on the display, press the **MENU** button to exit.

Upgrade Files

Select **Upgrade Files**, press the **ENTER** button to confirm, upgrade files will show on the display, press the **MENU** button to exit.

Firmware Version

Select **Firmware Version**, press the **ENTER** button to confirm, firmware version will show on the display, press the **MENU** button back to exit.

Reset Function

Enter menu mode, select **Reset Function**, press the **ENTER** button to confirm, use the **UP**/**DOWN** button to select **Pan & Tilt, Effect** or **All.**

Pan & Tilt

Select **Pan & Tilt**, press the **ENTER** button to confirm, use the **UP**/**DOWN** button to select **No**(normal) or **Yes** (the unit will run built-in program to reset pan and tilt to their home positions), press the **ENTER** button to store. Press the **MENU** button to exit.

Effect

Select **Effect,** press the **ENTER** button to confirm, use the **UP**/**DOWN** button to select **No**(normal) or **Yes** (the unit will run built-in program to reset effect to their home positions), press the **ENTER** button to store. Press the **MENU** button to exit.

All

Select **All,** press the **ENTER** button to confirm, use the **UP**/**DOWN** button to select **No**(normal) or **Yes** (the unit will run built-in program to reset all motors to their home positions), press **ENTER** button to store. Press the **MENU** button to exit.

Special Function

Factory Settings

Select **Factory Settings,** press the **ENTER** button to confirm, use the **UP**/**DOWN** button to select **No** (normal) or **Yes** (the fixture will reset to factory settings), press **ENTER** button to store. Press the **MENU** button to exit.

RDM FUNCTIONS

Select the MANUFACTURER menu to display the manufacturer of the fixture.

Select the SOFTWARE VERSION menu and the program version number of the fixture will be displayed.

Select the DMX START ADDRESS menu to change the DMX 512 address (001-512).

Select the DEVICE MODEL DESCRIPTION menu to display the model of the fixture.

Select the DEVICE LABEL menu to change the model of the fixture.

Select the DMX PERSONALITY menu to set the channel mode of the fixture (34/25/29/20 channel).

Select the DMX PERSONALITY DESCRIPTION menu to display the current channel mode of the fixture.

Select the DEVICE HOURS menu to display the running time of the fixture.

Select the PAN INVERT menu and the fixture will run the pan invert mode.

Select the TILT INVERT menu and the fixture will run the tilt invert mode.

Select the RESET DEVICE menu, the WARM RESET/COLD RESET option will be displayed. When WARM RESET is selected, the fixture will start a warm reset, and exit when COLD RESET is selected.

5.2 Home Position Adjustment

Press the **MENU** button into menu mode, then press the **ENTER** button for about 3 seconds into offset mode to adjust the home position. Select the function by the **ENTER** button. Use the **UP**/**DOWN** button to choose the submenu, press the **ENTER** button to store and automatically return to the last menu. Press MENU button to exit.

Offset Menu		
	Dimming Start	0~9999
	LED Frequency(Hz)	1072~1327
	Pan	-128~127
	Tilt	-128~127
	Cyan	-128~127
	Magenta	-128~127
	Yellow	-128~127
	Cto	-128~127
	Color	-128~127
	Gobo 1	-128~127
	R-Gobo 1	-128~127
	Gobo 2	-128~127
	Prism	0~255
	R-Prism	-128~127
	Frost1	0~255
	Frost2	0~255
	Iris	-128~127
	Focus	-128~127
	Zoom	-128~127
	Blade Rot	-128~127
	BladeDW1	0~255
	BladeDW2	0~255
	BladeUP1	0~255
	BladeUP2	0~255
	BladeLF1	0~255
	BladeLF2	0~255
	BladeRG1	0~255
	BladeRG2	0~255

Dimming Start

Enter offset mode, Select **Dimming Start**, press the **ENTER** button to confirm, the present position will blink on the display, use the **UP**/**DOWN** button to offset the value from 0 to 9999, press the **ENTER** button to store. Press the **MENU** button to exit.

LED Frequency(Hz)

Enter offset mode, Select **LED Frequency(Hz)**, press the **ENTER** button to confirm, the present position will blink on the display, use the **UP**/**DOWN** button to offset the value from 1072 to 1327, press the **ENTER** button to store. Press the **MENU** button to exit.

Pan

Enter offset mode, Select **Pan**, press the **ENTER** button to confirm, the present position will blink on the display, use the **UP**/**DOWN** button to offset the value from -128 to 127, press the **ENTER** button to store. Press the **MENU** button to exit.

Tilt

Enter offset mode, Select **Tilt**, press the **ENTER** button to confirm, the present position will blink on the display, use the **UP**/**DOWN** button to offset the value from -128 to 127, press the **ENTER** button to store. Press the **MENU** button to exit.

Cyan

Enter offset mode, Select **Cyan**, press the **ENTER** button to confirm, the present position will blink on the display, use the **UP**/**DOWN** button to offset the value from -128 to 127, press the **ENTER** button to store. Press the **MENU** button to exit.

Magenta

Enter offset mode, Select **Magenta**, press the **ENTER** button to confirm, the present position will blink on the display, use the **UP**/**DOWN** button to offset the value from -128 to 127, press the **ENTER** button to store. Press the **MENU** button to exit.

Yellow

Enter offset mode, Select **Yellow**, press the **ENTER** button to confirm, the present position will blink on the display, use the **UP**/**DOWN** button to offset the value from -128 to 127, press the **ENTER** button to store. Press the **MENU** button to exit.

Cto

Enter offset mode, Select **Cto**, press the **ENTER** button to confirm, the present position will blink on the display, use the **UP**/**DOWN** button to offset the value from -128 to 127, press the **ENTER** button to store. Press the **MENU** button to exit.

Color

Enter offset mode, Select **Color**, press the **ENTER** button to confirm, the present position will blink on the display, use the **UP**/**DOWN** button to offset the value from -128 to 127, press the **ENTER** button to store. Press the **MENU** button to exit.

Gobo1

Enter offset mode, Select **Gobo1**, press the **ENTER** button to confirm, the present position will blink on the display, use the **UP**/**DOWN** button to offset the value from -128 to 127, press the **ENTER** button to store. Press the **MENU** button to exit.

RGobo1

Enter offset mode, Select **RGobo1**, press the **ENTER** button to confirm, the present position will blink on the display, use the **UP**/**DOWN** button to offset the value from -128 to 127, press the **ENTER** button to store. Press the **MENU** button to exit.

Gobo2

Enter offset mode, Select **Gobo2**, press the **ENTER** button to confirm, the present position will blink on the display, use the **UP**/**DOWN** button to offset the value from -128 to 127, press the **ENTER** button to store. Press the **MENU** button to exit.

Prism

Enter offset mode, Select **Prism**, press the **ENTER** button to confirm, the present position will blink on the display, use the **UP**/**DOWN** button to offset the value from 0 to 255, press the **ENTER** button to store. Press the **MENU** button to exit.

RPrism

Enter offset mode, Select **RPrism**, press the **ENTER** button to confirm, the present position will blink on the display, use the **UP**/**DOWN** button to offset the value from -128 to 127, press the **ENTER** button to store. Press the **MENU** button to exit.

Frost1

Enter offset mode, Select **Frost1**, press the **ENTER** button to confirm, the present position will blink on the display, use the **UP**/**DOWN** button to offset the value from 0 to 255, press the **ENTER** button to store. Press the **MENU** button to exit.

Frost2

Enter offset mode, Select **Frost2**, press the **ENTER** button to confirm, the present position will blink on the display, use the **UP**/**DOWN** button to offset the value from 0 to 255, press the **ENTER** button to store. Press the **MENU** button to exit.

Iris

Enter offset mode, Select **Iris**, press the **ENTER** button to confirm, the present position will blink on the display, use the **UP**/**DOWN** button to offset the value from -128 to 127, press the **ENTER** button to store. Press the **MENU** button to exit.

Focus

Enter offset mode, Select **Focus**, press the **ENTER** button to confirm, the present position will blink on the display, use the **UP**/**DOWN** button to offset the value from -128 to 127, press the **ENTER** button to store. Press the **MENU** button to exit.

Zoom

Enter offset mode, Select **Zoom**, press the **ENTER** button to confirm, the present position will blink on the display, use the **UP**/**DOWN** button to offset the value from -128 to 127, press the **ENTER** button to store. Press the **MENU** button to exit.

Blade Rot

Enter offset mode, Select **Blade Rot,** press the **ENTER** button to confirm, the present position will blink on the display, use the **UP**/**DOWN** button to offset the value from -128 to 127, press the **ENTER** button to store. Press the **MENU** button to exit.

BladeDW1

Enter offset mode, Select **BladeDW1**, press the **ENTER** button to confirm, the present position will blink on the display, use the **UP**/**DOWN** button to offset the value from 000 to 255, press the **ENTER** button to store. Press the **MENU** button to exit.

BladeDW2

Enter offset mode, Select **BladeDW2**, press the **ENTER** button to confirm, the present position will blink on the display, use the **UP**/**DOWN** button to offset the value from 000 to 255, press the **ENTER** button to store. Press the **MENU** button to exit.

BladeUP1

Enter offset mode, Select **BladeUP1**, press the **ENTER** button to confirm, the present position will blink on the display, use the **UP**/**DOWN** button to offset the value from 000 to 255, press the **ENTER** button to store. Press the **MENU** button to exit.

BladeUP2

Enter offset mode, Select **BladeUP2**, press the **ENTER** button to confirm, the present position will blink on the display, use the **UP**/**DOWN** button to offset the value from 000 to 255, press the **ENTER** button to store. Press the **MENU** button to exit.

BladeLF1

Enter offset mode, Select **BladeLF1**, press the **ENTER** button to confirm, the present position will blink on the display, use the **UP**/**DOWN** button to offset the value from 000 to 255, press the **ENTER** button to store. Press the **MENU** button to exit.

BladeLF2

Enter offset mode, Select **BladeLF2**, press the **ENTER** button to confirm, the present position will blink on the display, use the **UP**/**DOWN** button to offset the value from 000 to 255, press the **ENTER** button to store. Press the **MENU** button to exit.

BladeRG1

Enter offset mode, Select **BladeRG1**, press the **ENTER** button to confirm, the present position will blink on the display, use the **UP**/**DOWN** button to offset the value from 000 to 255, press the **ENTER** button to store. Press the **MENU** button to exit.

BladeRG2

Enter offset mode, Select **BladeRG2**, press the **ENTER** button to confirm, the present position will blink on the display, use the **UP**/**DOWN** button to offset the value from 000 to 255, press the **ENTER** button to store. Press the **MENU** button to exit.

6. Control By Universal DMX Controller

6.1 DMX512 Connection

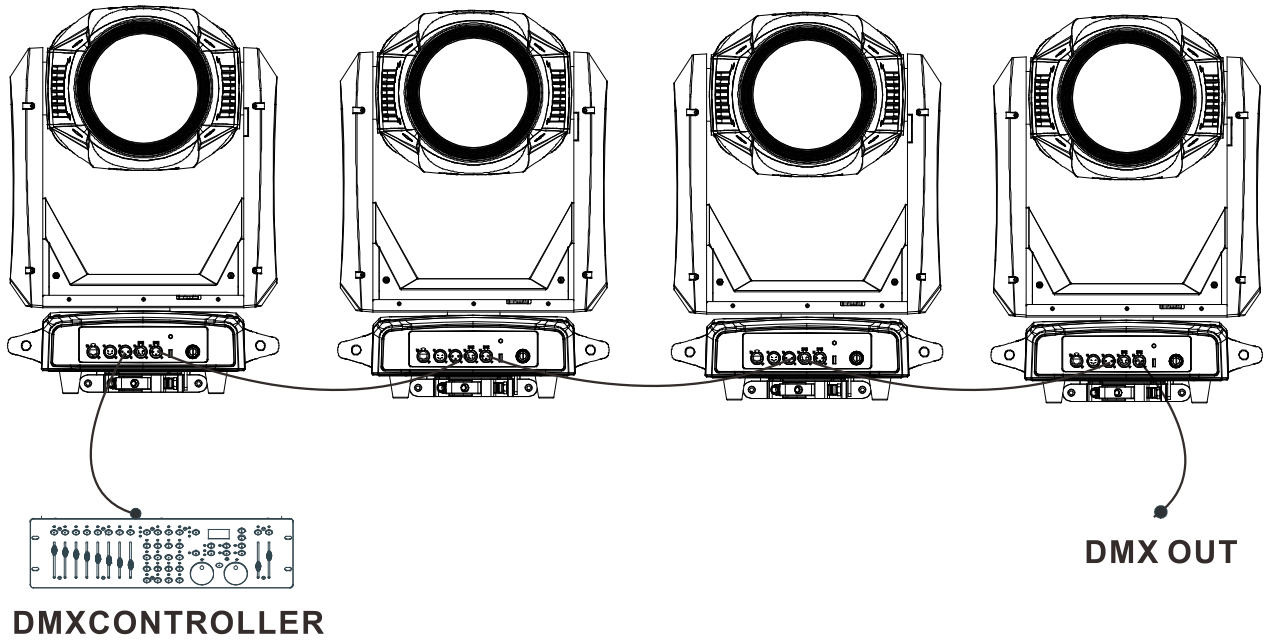

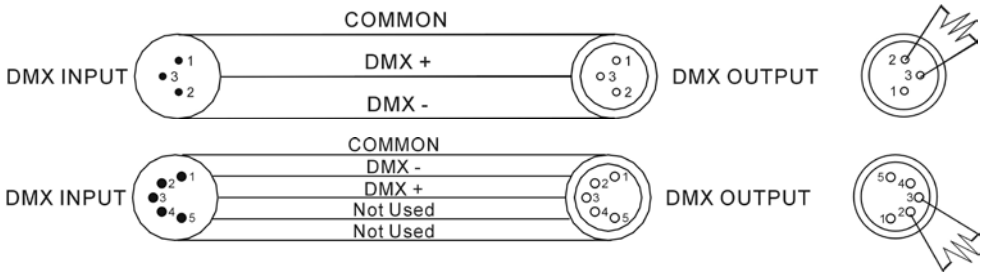

1. At last unit, the DMX cable has to be terminated with a terminator. Solder a 120-ohm 1⁄4W resistor between pin 2(DMX-) and pin 3(DMX+) into a 3-pin XLR-plug and plug it in the DMX-output of the last unit.
2. Connect the unit together in a “daisy chain” by XLR plug cable from the output of the unit to the input of the next unit. The cable cannot be branched or split to a “Y” cable. DMX 512 is a very high-speed signal. Inadequate or damaged cables, soldered joints or corroded connectors can easily distort the signal and shut down the system.
3. The DMX output and input connectors are pass-through to maintain the DMX circuit, when one of the units’ power is disconnected.
4. Each lighting unit needs to have a DMX address to receive the data by the controller. The address number is between 1-512.
5. The end of the DMX 512 system should be terminated to reduce signal errors.
6. 3 pin XLR connectors are more popular than 5 pins XLR.

   3 pin XLR: Pin 1: GND, Pin 2: Negative signal (-), Pin 3: Positive signal (+)

   5 pin XLR: Pin 1: GND, Pin 2: Negative signal (-), Pin 3: Positive signal (+), Pin4, Pin5 not used.

6.2 Address Setting

If you use a universal DMX controller to control the units, you have to set DMX address from 1 to 512 so that the units can receive DMX signal.

Press the MENU button to enter menu mode, select DMX Setting, press the ENTER button to confirm, use the UP/DOWN button to select Address, press the ENTER button to confirm, the present address will blinking the display, use the UP/DOWN button to adjust the address from 001 to 512, press the ENTER button to store. Press the MENU button back to the last menu or let the unit idle 30 seconds to exit menu mode.

Please refer to the following diagram to address your DMX512 channel for the first 4 units.

Channel mode	Unit 1 Address	Unit 2 Address	Unit 3 Address	Unit 4 Address
34 channels	1	35	69	103
25 channels	1	26	51	76
29 channels	1	30	59	88
20 channels	1	21	41	61

6.3 DMX512 Configuration

Please refer to below configurations to control the fixtures

Attentions:

1. The unit will maintain the last condition until reset if you cut-off the DMX signal.
2. For the channel Function, keep the value for about 3 seconds, then the corresponding function will take into effect.

34 Channels (Mode 1):

CHANNEL	VALUE	FUNCTION
1	000-255	**PAN** 0°→540°
2	000-255	**Pan Fine**
3	000-255	**TILT** 0°→270°
4	000-255	**Tilt Fine**
5	000-255	**X/Y Time** Fast to Slow
6	000-255	**Cyan** 0%→100%
7	000-255	**Magenta** 0%→100%
8	000-255	**Yellow** 0%→100%
9	000-255	**CTO** 0%→100%
10	000-009 010-018	**Color** Open Color1

	019-027	Color2
	028-036	Color3
	037-045	Color4
	046-063	Color5
	064-127	Color Index
	128-189	Fast to Slow
	190-193	Stop
	194-255	Slow to Fast
11		**Gobo1**
	000-009	Open
	010-018	Gobo1
	019-027	Gobo2
	028-036	Gobo3
	037-045	Gobo4
	046-054	Gobo5
	055-063	Gobo6
	064-074	Gobo1 Shaking
	075-085	Gobo2 Shaking
	086-096	Gobo3 Shaking
	097-107	Gobo4 Shaking
	108-118	Gobo5 Shaking
	119-127	Gobo6 Shaking
	128-189	Fast to Slow
	190-193	Stop
	194-255	Slow to Fast
12		**RGobo1**
	000-127	Index 0°→360°
	128-189	Fast to Slow
	190-193	Stop
	194-255	Slow to Fast
13		**Gobo2**
	000-007	Open
	008-014	Gobo1
	015-021	Gobo2
	022-028	Gobo3
	029-035	Gobo4
	036-042	Gobo5
	043-049	Gobo6
	050-056	Gobo7
	057-063	Gobo8
	064-071	Gobo1 Shaking
	072-079	Gobo2 Shaking
	080-087	Gobo3 Shaking
	088-095	Gobo4 Shaking
	096-103	Gobo5 Shaking
	104-111	Gobo6 Shaking

	112-119 120-127 128-189 190-193 194-255	Gobo7 Shaking Gobo8 Shaking Fast to Slow Stop Slow to Fast
14	000-255	**Iris** 100%→0%
15	000-007 008-255	**Prism** Open Prism
16	000-127 128-189 190-193 194-255	**R-Prism** Index 0°→360° Fast to Slow Stop Slow to Fast
17	000-007 008-255	**CRI** Close Open
18	000-255	**Frost1(Light)** 0%→100%
19	000-255	**Frost2(Heavy)** 0%→100%
20	000-255	**Zoom** 100%→0%
21	000-255	**Focus** 0%→100%
22	000-007 008-015 016-131 132-139 140-181 182-189 190-231 232-239 240-247 248-255	**Strobe** Close Open Strobe Slow to Fast Open Fast Open Slow Close Open Fast Close Slow Open Open Random Strobe Open
23	000-255	**Dimmer** 0%→100%
24	000-255	**Dimmer Fine**
25	000-255	**Blade** 0°→180°
26	000-255	**Blade DW 1** 0%→100%

27	000-255	**Blade DW 2** 0%→100%
28	000-255	**Blade UP 1** 0%→100%
29	000-255	**Blade UP 2** 0%→100%
30	000-255	**Blade LF 1** 0%→100%
31	000-255	**Blade LF 2** 0%→100%
32	000-255	**Blade RG 1** 0%→100%
33	000-255	**Blade RG 2** 0%→100%
34		**SPECIAL FUNCTION**
	000-029	Null
	030-039	Dimmer Curve Square Law
	040-049	Dimmer Curve INV Square Law
	050-059	Dimmer Curve Linear
	060-069	Dimmer Curve S
	070-079	Standard
	080-089	Quiet
	090-099	Compatible
	100-109	Led Frequency Setting Enable
	110-119	Led Frequency Setting Disable
	120-129	Null
	130-139	Focus Compensate Disable
	140-149	Focus Compensate Near
	150-159	Focus Compensate Medium
	160-169	Focus Compensate Far
	170-179	Null
	180-189	Dimmer Speed Fast
	190-199	Dimmer Speed Smooth
	200-209	Reset All
	210-219	Reset Effect
	220-229	Reset Pan/Tilt
	230-255	Null

25 Channels (Mode 2):

CHANNEL	VALUE	FUNCTION
1	000-255	**PAN** 0°→540°
2	000-255	**Pan Fine**
3	000-255	**TILT** 0°→270°
4	000-255	**Tilt Fine**
5	000-255	**X/Y Time** Fast to Slow
6	000-255	**Cyan** 0%→100%
7	000-255	**Magenta** 0%→100%
8	000-255	**Yellow** 0%→100%
9	000-255	**CTO** 0%→100%
10		**Color**
	000-009	Open
	010-018	Color1
	019-027	Color2
	028-036	Color3
	037-045	Color4
	046-063	Color5
	064-127	Color Index
	128-189	Fast to Slow
	190-193	Stop
	194-255	Slow to Fast
11		**Gobo1**
	000-009	Open
	010-018	Gobo1
	019-027	Gobo2
	028-036	Gobo3
	037-045	Gobo4
	046-054	Gobo5
	055-063	Gobo6
	064-074	Gobo1 Shaking
	075-085	Gobo2 Shaking
	086-096	Gobo3 Shaking
	097-107	Gobo4 Shaking
	108-118	Gobo5 Shaking
	119-127	Gobo6 Shaking

	128-189 190-193 194-255	Fast to Slow Stop Slow to Fast
12		**RGobo1**
	000-127 128-189 190-193 194-255	Index 0°→360° Fast to Slow Stop Slow to Fast
13		**Gobo2**
	000-007 008-014 015-021 022-028 029-035 036-042 043-049 050-056 057-063 064-071 072-079 080-087 088-095 096-103 104-111 112-119 120-127 128-189 190-193 194-255	Open Gobo1 Gobo2 Gobo3 Gobo4 Gobo5 Gobo6 Gobo7 Gobo8 Gobo1 Shaking Gobo2 Shaking Gobo3 Shaking Gobo4 Shaking Gobo5 Shaking Gobo6 Shaking Gobo7 Shaking Gobo8 Shaking Fast to Slow Stop Slow to Fast
14		**Iris**
	000-255	100%→0%
15		**Prism**
	000-007 008-255	Open Prism
16		**R-Prism**
	000-127 128-189 190-193 194-255	Index 0°→360° Fast to Slow Stop Slow to Fast
17		**CRI**
	000-007 008-255	Close Open
18		**Frost1(Light)**
	000-255	0%→100%
19		**Frost2(Heavy)**
	000-255	0%→100%

20	000-255	**Zoom** 100%→0%
21	000-255	**Focus** 0%→100%
22		**Strobe**
	000-007	Close
	008-015	Open
	016-131	Strobe Slow to Fast
	132-139	Open
	140-181	Fast Open Slow Close
	182-189	Open
	190-231	Fast Close Slow Open
	232-239	Open
	240-247	Random Strobe
	248-255	Open
23	000-255	**Dimmer** 0%→100%
24	000-255	**Dimmer Fine**
25		**SPECIAL FUNCTION**
	000-029	Null
	030-039	Dimmer Curve Square Law
	040-049	Dimmer Curve INV Square Law
	050-059	Dimmer Curve Linear
	060-069	Dimmer Curve S
	070-079	Standard
	080-089	Quiet
	090-099	Compatible
	100-109	Led Frequency Setting Enable
	110-119	Led Frequency Setting Disable
	120-129	Null
	130-139	Focus Compensate Disable
	140-149	Focus Compensate Near
	150-159	Focus Compensate Medium
	160-169	Focus Compensate Far
	170-179	Null
	180-189	Dimmer Speed Fast
	190-199	Dimmer Speed Smooth
	200-209	Reset All
	210-219	Reset Effect
	220-229	Reset Pan/Tilt
	230-255	Null

29 Channels (Mode 3):

CHANNEL	VALUE	FUNCTION
1	000-255	**PAN** 0°→540°
2	000-255	**Pan Fine**
3	000-255	**TILT** 0°→270°
4	000-255	**Tilt Fine**
5	000-255	**X/Y Time** Fast to Slow
6	000-255	**Cyan** 0%→100%
7	000-255	**Magenta** 0%→100%
8	000-255	**Yellow** 0%→100%
9	000-255	**CTO** 0%→100%
10	000-009 010-018 019-027 028-036 037-045 046-063 064-127 128-189 190-193 194-255	**Color** Open Color1 Color2 Color3 Color4 Color5 Color Index Fast to Slow Stop Slow to Fast
11	000-255	**Iris** 100%→0%
12	000-007 008-255	**CRI** Close Open
13	000-255	**Frost1(Light)** 0%→100%
14	000-255	**Frost2(Heavy)** 0%→100%
15	000-255	**Zoom** 100%→0%
16	000-255	**Focus** 0%→100%

17		**Strobe**
	000-007	Close
	008-015	Open
	016-131	Strobe Slow to Fast
	132-139	Open
	140-181	Fast Open Slow Close
	182-189	Open
	190-231	Fast Close Slow Open
	232-239	Open
	240-247	Random Strobe
	248-255	Open
18		**Dimmer**
	000-255	0%→100%
19	000-255	**Dimmer Fine**
20		**Blade**
	000-255	0°→180°
21		**Blade DW 1**
	000-255	0%→100%
22		**Blade DW 2**
	000-255	0%→100%
23		**Blade UP 1**
	000-255	0%→100%
24		**Blade UP 2**
	000-255	0%→100%
25		**Blade LF 1**
	000-255	0%→100%
26		**Blade LF 2**
	000-255	0%→100%
27		**Blade RG 1**
	000-255	0%→100%
28		**Blade RG 2**
	000-255	0%→100%
29		**SPECIAL FUNCTION**
	000-029	Null
	030-039	Dimmer Curve Square Law
	040-049	Dimmer Curve INV Square Law
	050-059	Dimmer Curve Linear
	060-069	Dimmer Curve S
	070-079	Standard
	080-089	Quiet
	090-099	Compatible
	100-109	Led Frequency Setting Enable
	110-119	Led Frequency Setting Disable
	120-129	Null
	130-139	Focus Compensate Disable

	140-149 150-159 160-169 170-179 180-189 190-199 200-209 210-219 220-229 230-255	Focus Compensate Near Focus Compensate Medium Focus Compensate Far Null Dimmer Speed Fast Dimmer Speed Smooth Reset All Reset Effect Reset Pan/Tilt Null

20 Channels (Mode 4):

CHANNEL	VALUE	FUNCTION
1	000-255	**PAN** 0°→540°
2	000-255	**Pan Fine**
3	000-255	**TILT** 0°→270°
4	000-255	**Tilt Fine**
5	000-255	**X/Y Time** Fast to Slow
6	000-255	**Cyan** 0%→100%
7	000-255	**Magenta** 0%→100%
8	000-255	**Yellow** 0%→100%
9	000-255	**CTO** 0%→100%
10	000-009 010-018 019-027 028-036 037-045 046-063 064-127 128-189 190-193 194-255	**Color** Open Color1 Color2 Color3 Color4 Color5 Color Index Fast to Slow Stop Slow to Fast
11		**Iris**

	000-255	100%→0%
12		**CRI**
	000-007	Close
	008-255	Open
13		**Frost1(Light)**
	000-255	0%→100%
14		**Frost2(Heavy)**
	000-255	0%→100%
15		**Zoom**
	000-255	100%→0%
16		**Focus**
	000-255	0%→100%
17		**Strobe**
	000-007	Close
	008-015	Open
	016-131	Strobe Slow to Fast
	132-139	Open
	140-181	Fast Open Slow Close
	182-189	Open
	190-231	Fast Close Slow Open
	232-239	Open
	240-247	Random Strobe
	248-255	Open
18		**Dimmer**
	000-255	0%→100%
19	000-255	**Dimmer Fine**
20		**SPECIAL FUNCTION**
	000-029	Null
	030-039	Dimmer Curve Square Law
	040-049	Dimmer Curve INV Square Law
	050-059	Dimmer Curve Linear
	060-069	Dimmer Curve S
	070-079	Standard
	080-089	Quiet
	090-099	Compatible
	100-109	Led Frequency Setting Enable
	110-119	Led Frequency Setting Disable
	120-129	Null
	130-139	Focus Compensate Disable
	140-149	Focus Compensate Near
	150-159	Focus Compensate Medium
	160-169	Focus Compensate Far
	170-179	Null
	180-189	Dimmer Speed Fast
	190-199	Dimmer Speed Smooth

	200-209 210-219 220-229 230-255	Reset All Reset Effect Reset Pan/Tilt Null

7. Error Information

1. Pan Reset Error

Check if the position of the pan mounting magnetic steel falls off or is damaged.

Check if there are other interference items in the pan operating range.

Check if the pan Hall elements is damaged.

Check if the pan Hall elements is in poor contact with the lead of the PCB board or disconnected.

Check if the pan motor is damaged.

Check if there is any damage to the circuit of the pan motor drive board.

2. Pan Encoder Error

Check if the pan encoder is damaged.

Check if the pan encoder is in poor contact with the lead of the PCB board or disconnected.

3. Tilt Reset Error

Check if the position of the tilt mounting magnetic steel falls off or is damaged.

Check if there are other interference items in the tilt operating range.

Check if the tilt Hall elements is damaged.

Check if the tilt Hall elements is in poor contact with the lead of the PCB board or disconnected.

Check if the tilt motor is damaged.

Check if there is any damage to the circuit of the tilt motor drive board.

4. Tilt Encoder Error

Check if the tilt encoder is damaged.

Check if the tilt encoder is in poor contact with the lead of the PCB board or disconnected.

5. CPU-B/C/D/E/F/G/H Error

Check whether the 485 (DATA) leads on the PCB board are install in place or disconnected.

Check whether the 485 (DATA) lead is disconnected.

Check whether the relevant signal circuit 485 (DATA) on the PCB board is damaged.

6. Cyan Reset Error

Check if the position of the cyan color wheel mounting magnetic steel falls off or is damaged.

Check if there are other interference items in the cyan color wheel operating range.

Check if the cyan color wheel Hall elements is damaged.

Check if the cyan color wheel Hall elements is in poor contact with the lead of the PCB board or disconnected.

Check if the cyan color wheel motor is damaged.

Check if there is any damage to the circuit of the cyan color wheel motor drive board.

7. Magenta Reset Error

Check if the position of the magenta color wheel mounting magnetic steel falls off or is damaged.

Check if there are other interference items in the magenta color wheel operating range.

Check if the magenta color wheel Hall elements is damaged.

Check if the magenta color wheel Hall elements is in poor contact with the lead of the PCB board or disconnected.

Check if the magenta color wheel motor is damaged.

Check if there is any damage to the circuit of the magenta color wheel motor drive board.

8. Yellow Reset Error

Check if the position of the yellow color wheel mounting magnetic steel falls off or is damaged.

Check if there are other interference items in the yellow color wheel operating range.

Check if the yellow color wheel Hall elements is damaged.

Check if the yellow color wheel Hall elements is in poor contact with the lead of the PCB board or disconnected.

Check if the yellow color wheel motor is damaged.

Check if there is any damage to the circuit of the yellow color wheel motor drive board.

9. CTO Reset Error

Check if the position of the CTO mounting magnetic steel falls off or is damaged.

Check if there are other interference items in the CTO operating range.

Check if the CTO Hall elements is damaged.

Check if the CTO Hall elements is in poor contact with the lead of the PCB board or disconnected.

Check if the CTO motor is damaged.

Check if there is any damage to the circuit of the CTO motor drive board.

10. Gobo1/2 Reset Error

Check if the position of the gobo wheel1/2 mounting magnetic steel falls off or is damaged.

Check if there are other interference items in the gobo wheel1/2 operating range.

Check if the gobo wheel1/2 Hall elements is damaged.

Check if the gobo wheel1/2 Hall elements is in poor contact with the lead of the PCB board or disconnected.

Check if the gobo wheel1/2 motor is damaged.

Check if there is any damage to the circuit of the gobo wheel1/2 motor drive board.

11. RGobo1 Reset Error

Check if the position of the gobo wheel1 mounting magnetic steel falls off or is damaged.

Check if there are other interference items in the gobo wheel1 operating range.

Check if the gobo wheel1 Hall elements is damaged.

Check if the gobo wheel1 Hall elements is in poor contact with the lead of the PCB board or disconnected.

Check if the gobo wheel1 motor is damaged.

Check if there is any damage to the circuit of the gobo wheel1 motor drive board.

12. Prism1/RPrism1 Reset Error

Check if the position of the prism1 mounting magnetic steel falls off or is damaged.

Check if there are other interference items in the prism1 operating range.

Check if the prism1 Hall elements is damaged.

Check if the prism1 Hall elements is in poor contact with the lead of the PCB board or disconnected.

Check if the prism1 motor is damaged.

Check if there is any damage to the circuit of the prism1 motor drive board.

13. Zoom Reset Error

Check if the position of the zoom mounting magnetic steel falls off or is damaged.

Check if there are other interference items in the zoom operating range.

Check if the zoom Hall elements is damaged.

Check if the zoom Hall elements is in poor contact with the lead of the PCB board or disconnected.

Check if the zoom motor is damaged.

Check if there is any damage to the circuit of the zoom motor drive board.

14. Focus Reset Error

Check if the position of the focus mounting magnetic steel falls off or is damaged.

Check if there are other interference items in the focus operating range.

Check if the focus Hall elements is damaged.

Check if the focus Hall elements is in poor contact with the lead of the PCB board or disconnected.

Check if the focus motor is damaged.

Check if there is any damage to the circuit of the focus motor drive board.

15. Blade Reset Error

Check if the position of the blade mounting magnetic steel falls off or is damaged.

Check if there are other interference items in the blade operating range.

Check if the blade Hall elements is damaged.

Check if the blade Hall elements is in poor contact with the lead of the PCB board or disconnected.

Check if the blade motor is damaged.

Check if there is any damage to the circuit of the blade motor drive board.

16. Led Fan1/2/3/4 Error

Check if the fan is stopped when in operation.

Check if there is any foreign body sticking to the fan blade.

Check if the fan voltage is within the normal range.

Check if the plug of the fan is in good contact.

Check if the fan circuit on the PCB board is normal.

8. Troubleshooting

Following are a few common problems that may occur during operation. Here are some suggestions for easy troubleshooting:

A. The unit does not work, no light and the fan does not work

1. Check the connect power.
2. Measure the mains voltage on the main connector.
3. Check the power on LED to see if it can be light up or not.

B. Not responding to DMX controller

1. DMX LED should be on. If not, check DMX connectors, cables to see if they are linked properly.
2. If the DMX LED is on and no response to the channel, check the address settings and DMX polarity.
3. If you have intermittent DMX signal problems, check the pins on connectors or on PCB of the unit or the previous one.
4. Try to use another DMX controller.
5. Check to see if the DMX cables run near or run alongside to high voltage cables that may cause damage or interference to DMX interface circuit.

C. One of the channels is not working well

1. The stepper motor might be damaged or the cable connected to the PCB is broken.
2. The motor's drive IC on the PCB might be out of condition.

9. Fixture Cleaning

The cleaning of internal and external optical lenses and/or mirrors must be carried out periodically to optimize light output. Cleaning frequency depends on the environment in which the fixture operates: damp, smoky or particularly dirty surrounding can cause greater accumulation of dirt on the unit's optics.

- Clean with soft cloth and use normal glass to clean liquid.
- Always dry the parts carefully.
- Clean the external optics at least every 20 days. Clean the internal optics at least every 30 days.

Declaration of Conformity

We declare that our products (lighting equipments) comply with the following specification and bears CE mark in accordance with the provision of the Electromagnetic Compatibility (EMC) Directive 2014/30/EU.

EN 55032: 2015; EN 61000-3-2: 2014;
EN 61000-3-3: 2013; EN 55103-2: 2009.

&

Harmonized Standard

EN 60598-1: 2015; EN 60598-2-17: 2018;
EN 62493: 2015
Safety of household and similar electrical appliances
Part 1: General requirements

Innovation, Quality, Performance