ACME®

SUPER GEIST
FRAMING

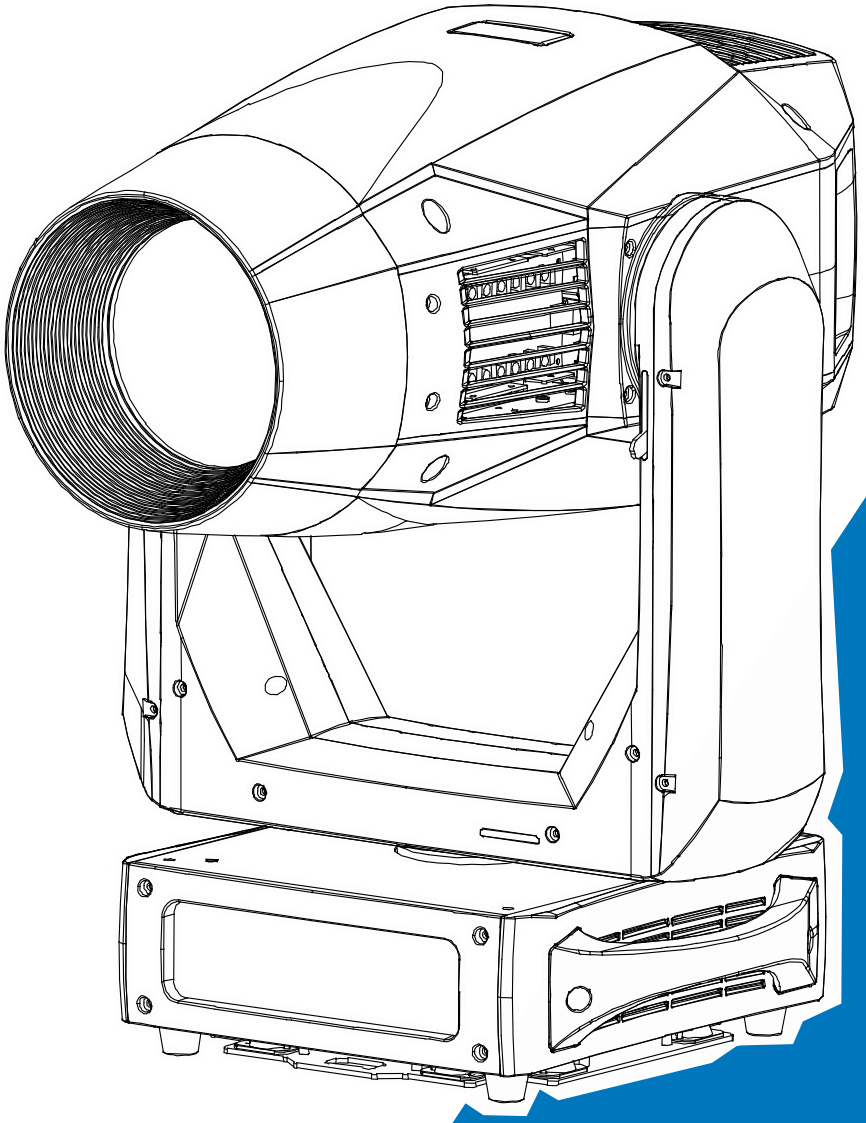

User Manual

Please read the instruction carefully before use

CONTENTS

1. Safety Instructions

Please read the instruction carefully which includes important information about the installation, usage and maintenance.

WARNING

Please keep this User Guide for future consultation. If you sell the unit to another user, be sure that they also receive this instruction manual.

Important:

Damages caused by the disregard of this user manual are not subject to warranty. The dealer will not accept liability for any resulting defects or problems.

- Unpack and check carefully to ensure that there is no transportation damage before using the unit.
- This product is for indoor use only. Use only in a dry location.
- DO install and operate by qualified operator.
- DO NOT allow children to operate the fixture.
- Use safety chain when fixing the unit. Handle the unit by carrying its base instead of head only.
- The unit must be installed in a location with adequate ventilation, at least 50cm from adjacent surfaces.
- Be sure that no ventilation slots is blocked, otherwise the unit will be overheated.
- Before operation, ensure that you are connecting this product to the proper voltage in accordance with the specifications in this manual or on the product's specification label.
- It's important to ground the yellow/green conductor to earth in order to avoid electric shock.
- Minimum ambient temperature TA: 0℃. Maximum ambient temperature TA: 40℃. Do not operate this product at a lower or higher temperature.
- DO NOT connect the device to any dimmer pack.
- Keep flammable materials away from the fixture while operating to avoid fire hazard.
- Make sure the power cord is not crimped or damaged; replace it immediately if damaged.
- Unit's surface temperature may reach up to 65℃. DO NOT touch the housing bare-handed during its operation.

- Avoid any flammable liquids, water or metal from entering the unit. Once it happens, cut off the mains power immediately.
- DO NOT operate in a dirty or dusty environment. DO clean the fixture regularly.
- DO NOT touch any wire during operation as there might be a hazard of electric shock.
- Avoid entanglement of the power cord with other wires.
- The minimum distance to objects/surface must be more than 5 meters.
- Disconnect mains power before fuse replacement or servicing.
- Replace fuse only with the same type.
- In the event of serious operating problem, stop using the unit immediately.
- Never turn on and off the unit time after time.
- The housing, the lenses, or the ultraviolet filter must be replaced if they are visibly damaged.
- DO NOT open the housing as there are no user serviceable parts inside.
- DO NOT attempt to operate this unit if it becomes damaged. DO NOT attempt any repairs yourself. Repairs carried out by unskilled people can lead to damage or malfunction. Please contact the nearest authorized technical assistance center if needed.
- Disconnect this product from its power source before servicing.
- DO use the original packaging if the device is to be transported.
- Avoid direct eye exposure to the light source while the product is on.
- DO NOT operate this product if you see damage on the housing, shields, or cables. Have the damaged parts replaced by an authorized technician at once.

Installation:

The fixture should be fixed on the clamp. Always ensure that the unit is firmly fixed to avoid vibration and slipping off during operation. Ensure that the trussing or area of installation must be able to hold 10 times the weight without any deformation. Always install a safety cable that can hold at least 12 times the weight of the fixture when installing.

DO install and operate by qualified operator. It must be installed in a place where there is out of the reach of people.

2. Technical Specifications

Power Voltage:

AC 100~240V, 50/60Hz

Power Consumption:

970W

Light Source:

SHL600-70-R90

Color Temperature:

6000K

Zoom Range:

7°~42°

Movement:

Pan: 540°

Tilt: 270°

Pan/Tilt Resolution: 16 bit

Fixation: Tilt lock

Dimmer/Shutter:

0%~100% smooth dimming, various strobe speeds

Color Wheel:

1 x color wheel with 6 colors plus white

Gobo Wheel:

1 x static gobo wheel with 8 gobos plus open

1 x rotating gobo wheel with 6 gobos plus open, easy to replace

Control:

DMX Channel: 30/32 channels

Control Mode: DMX512, RDM

Firmware Upgrade via DMX link

Construction:

Display: LCD display

Battery backup for user operation without connecting to the mains

Data In/Out: 3-pin and 5-pin XLR

Power In/Out: Power Connector in

Protection Rating: IP20

Features:

Motorized linear focus

Linear CMY color mixing + Linear CTO color correction

1 x prism: 4-facet prism rotating in both directions

Independent frost effect

Motorized linear iris

4 fast and smooth framing shutters, each shutter blade position and angle can be controlled individually; Each shutter blade can block out light completely, the framing module can be rotated at ± 45°

Dimensions/Weight:

454x335x816mm, 40kgs

17.9”x13.2"x32.1"in, 88.2lbs

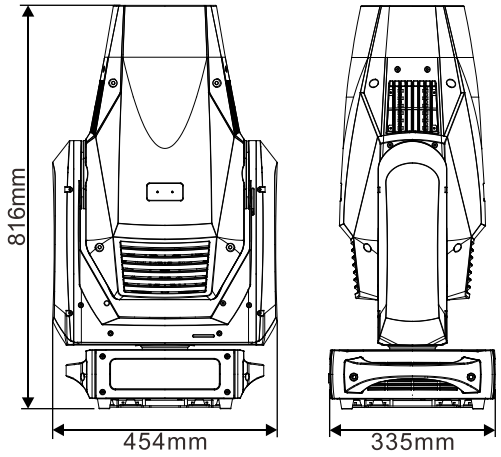

Photometric Diagram:

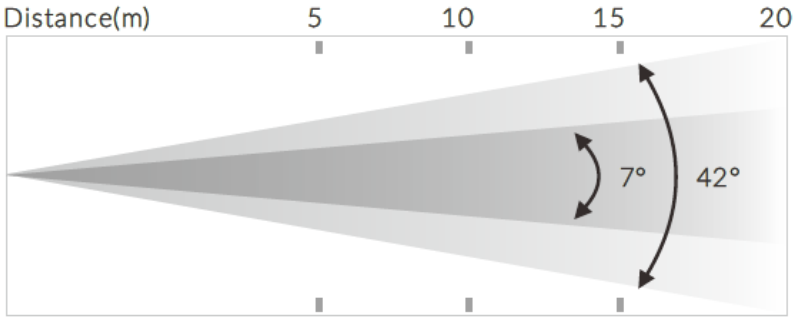

7°Lux	32500	8125	3610	2030
Diameter(m)	0.7	1.3	2	2.6
42°Lux	1850	462	205	115
Diameter(m)	3.8	7.6	16.4	15.2

3. Control Panel

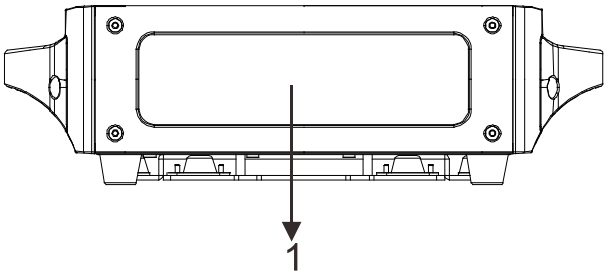

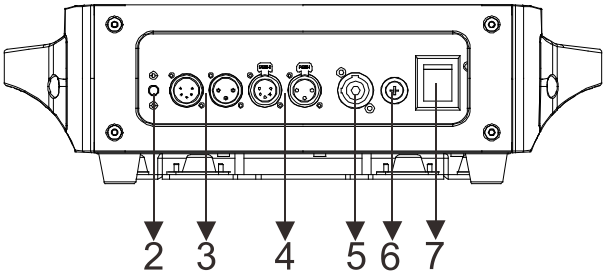

1. Display: Used to show the various menus and the selected function

MENU	To select the programming functions
▼ **UP**	To go backward in the selected functions
▲ **DOWN**	To go forward in the selected functions
ENTER	To confirm the selected functions

2. BATTERY DISPLAY

3. DMX IN:

For DMX512 link, use 3/5-pin XLR cable to link the unit and DMX controller to input DMX signal

4. DMX OUT:

For DMX512 link, use 3/5-pin XLR cable to link the next unit to output DMX signal

5. POWER: Connects to supply power

6. FUSE (T 15A): Protect the unit from damage of overcurrent or short-circuit

7. POWER WITCH: Turns on/off the power

4. Effect Wheels

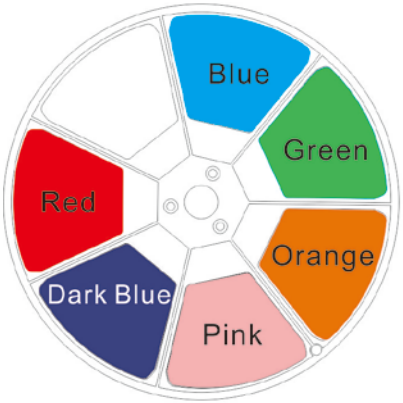

COLOR

STATIC GOBO WHEEL

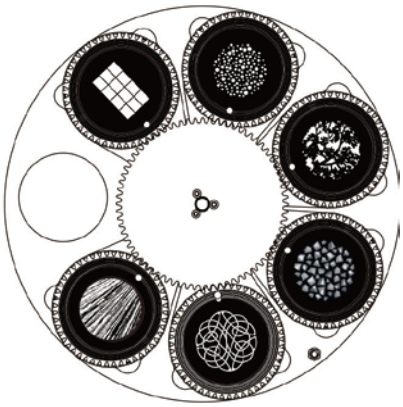

ROATING GOBO WHEEL

DANGER!

Install the rotating gobos with the device switched off only.
Unplug from mains before changing the rotating gobos!

5. How To Set The Unit

5.1 Main Function

Turn on the unit, press the MENU button into menu mode, and press the UP/DOWN button until the required function is shown on the monitor. Select the function by pressing the ENTER button. Use the UP/DOWN button to choose the submenu, press the ENTER button to store and automatically return to the last menu. Press the MENU button or let the unit idle 30 seconds to exit menu mode.

The main functions are shown below:

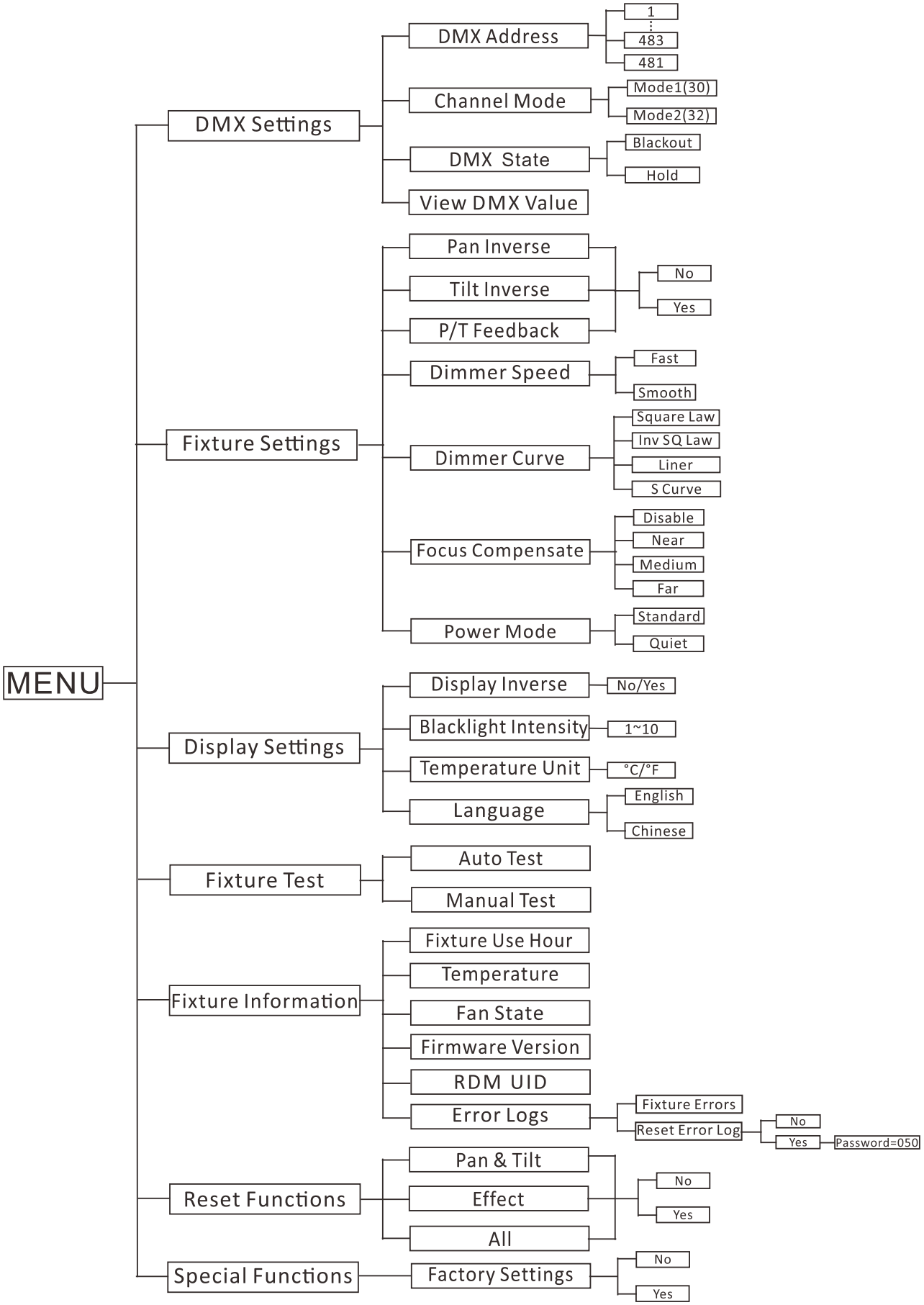
MENU
DMX Settings
DMX Address
1
483
481
Channel Mode
Mode1(30)
Mode2(32)
DMX State
Blackout
Hold
View DMX Value
Fixture Settings
Pan Inverse
Tilt Inverse
P/T Feedback
No
Yes
Dimmer Speed
Fast
Smooth
Dimmer Curve
Square Law
Inv SQ Law
Liner
S Curve
Focus Compensate
Disable
Near
Medium
Far
Power Mode
Standard
Quiet
Display Settings
Display Inverse
No/Yes
Blacklight Intensity
1~10
Temperature Unit
°C/°F
Language
English
Chinese
Fixture Test
Auto Test
Manual Test
Fixture Information
Fixture Use Hour
Temperature
Fan State
Firmware Version
RDM UID
Error Logs
Fixture Errors
Reset Error Log
No
Yes
Password=050
Reset Functions
Pan & Tilt
Effect
All
No
Yes
Special Functions
Factory Settings
No
Yes

DMX Settings

To select **DMX Settings,** press the **ENTER** button to confirm, use the **UP/DOWN** button to select **DMX Address, Channel Mode, DMX State** or **View DMX Value.**

DMX Address

To select **DMX Address**, press the **ENTER** button to confirm. Use the **UP/DOWN** button to adjust the address from **001** to **483/481**, press the **ENTER** button to store. Press the **MENU** button back to the last menu or let the unit idle 30 seconds to exit menu mode.

Channel Mode

To select **Channel Mode**, press the **ENTER** button to confirm. Use the **UP/DOWN** button to select **Mode1 (30)** or **Mode2 (32)**, press the **ENTER** button to store. Press the **MENU** button back to the last menu or let the unit idle 30 seconds to exit menu mode

DMX State

To select **DMX State**, press the **ENTER** button to confirm. Use the **UP/DOWN** button to select **Blackout** or **Hold**, press the **ENTER** button to store. Press the **MENU** button back to the last menu or let the unit idle 30 seconds to exit menu mode

View DMX Value

To select **View DMX Value**, press the **ENTER** button to confirm. Use the **UP/DOWN** button to view the DMX channel value. Press the **MENU** button back to the last menu or let the unit idle 30 seconds to exit menu mode.

Fixture Settings

To select **Fixture Settings**, press the **ENTER** button to confirm, use the **UP/DOWN** button to select **Pan Inverse, Tilt Inverse, P/T Feedback**, **Dimmer Speed, Dimmer Curve, Focus Compensate** or **Power Mode.**

Pan Inverse

To select **Pan Inverse**, press the **ENTER** button to confirm. Use the **UP/DOWN** button to select **No** (normal) or **Yes** (pan inverse), press the **ENTER** button to store. Press the **MENU** button back to the last menu or let the unit idle 30 seconds to exit menu mode.

Tilt Inverse

To select **Tilt Inverse**, press the **ENTER** button to confirm. Use the **UP/DOWN** button to select **No** (normal) or **Yes** (tilt inverse), press the **ENTER** button to store. Press the **MENU** button back to the last menu or let the unit idle 30 seconds to exit menu mode.

P/T Feedback

To select **P/T Feedback**, press the **ENTER** button to confirm. Use the **UP/DOWN** button to select **No** (Pan or tilt's position will not feedback while out of step) or **Yes** (Feedback while pan/tilt out of step), press the **ENTER** button to store. Press the **MENU** button back to the last menu or let the unit idle 30 seconds to exit menu mode.

Dimmer Speed

To select **Dimmer Speed**, press the **ENTER** button to confirm. Use the **UP/DOWN** button to select **Fast** or **Smooth,** press the **ENTER** button to store. Press the **MENU** button back to the last menu or let the unit idle 30 seconds to exit menu mode.

Dimmer Curve

To select **Dimmer Curve**, press the **ENTER** button to confirm. Use the **DOWN/UP** button to select the **Square, Inv SQ Law, Liner** or **S Curve**, press the **ENTER** button to store. Press the **MENU** button back to the last menu or let the unit idle 30 seconds to exit menu mode.

Dimmer Modes

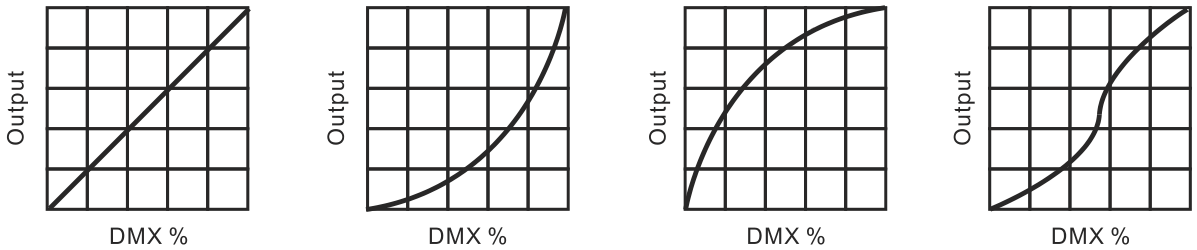

Optically Linear Square Law Inverse Square Law S-curve

Optically Linear: The increase in light intensity appears to be linear as DMX value is increased.

Square Law: Light intensity control is finer at low levels and coarser at high levels.

Inverse Square Law: Light intensity control is coarser at low levels and finger at high levels.

S-Curve: Light intensity control is finger at low levels and high levels and coarser at medium levels.

Focus Compensate

To select **Focus Compensate**, press the **ENTER** button to confirm. Use the **UP**/**DOWN** button to select **Disable, Near, Medium** or **Far**, press the **ENTER** button to store. Press the **MENU** button back to the last menu or let the unit idle 30 seconds to exit menu mode.

Power Mode

To select **Power Mode**, press the **ENTER** button to confirm. Use the **UP**/**DOWN** button to select **Standard** or **Quiet**, press the **ENTER** button to store. Press the **MENU** button back to the last menu or let the unit idle 30 seconds to exit menu mode.

Display Settings

To select **Display Settings**, press the **ENTER** button to confirm, use the **UP**/**DOWN** button to select **Display Inverse, Backlight Intensity, Temperature Unit** or **Language**.

Display Inverse

Select **Display Inverse**, press the **ENTER** button to confirm, present mode will blink on the display, use the **UP**/**DOWN** button to select **No** (normal display) or **Yes** (inverse display), press the **ENTER** button to store. Press the **MENU** button back to the last menu or let the unit idle 30 seconds to exit menu mode.

Backlight Intensity

Select **Backlight Intensity**, press the **ENTER** button to confirm, present mode will blink on the display, use the **UP**/**DOWN** button to adjust the backlight intensity from **1** (dark) to **10** (bright), press the **ENTER** button to store. Press the **MENU** button back to the last menu or let the unit idle 30 seconds to exit menu mode.

Temperature Unit

Select **Temperature Unit**, press the **ENTER** button to confirm, present mode will blink on the display, use the **UP**/**DOWN** button to select ℃ or ℉, press the **ENTER** button to store. Press the **MENU** button back to the last menu or let the unit idle 30 seconds to exit menu mode.

Language

Select **Language**, press the **ENTER** button to confirm, present mode will blink on the display, use the **UP**/**DOWN** button to select **English** or **Chinese**, press the **ENTER** button to store. Press the **MENU** button back to the last menu or let the unit idle 30 seconds to exit menu mode.

Fixture Test

To select **Fixture Test**, press the **ENTER** button to confirm, use the **UP**/**DOWN** button to select **Auto Test** or **Manual Test**

Auto Test

Select **Auto Test**, press the **ENTER** button to confirm, the unit will run built-in programs to automatically test pan, tilt, color, gobo, gobo rotation, prism, prism rotation, iris, focus, zoom, etc. Press the **MENU** button back to the last menu or exit menu mode after auto test.

Manual Test

Select **Manual Test**, press the **ENTER** button to confirm, the present channel will show on the display, use the **UP**/**DOWN** button to select channel, press the **ENTER** button to confirm, then use the **UP**/**DOWN** button to adjust the value, press the **ENTER** button to store, the fixture will run as the channel value indicates. Press the **MENU** button back to the last menu or exit menu mode idling 30 seconds.

(All channels value will become 0 after exiting Manual Test menu)

Fixture Information

To select **Fixture Information**, press the **ENTER** button to confirm, use the **UP**/**DOWN** button to select **Fixture Use Hour, Temperature, Fan State, Firmware Version, RDM UID** or **Error Logs.**

Fixture Use Hour

Select **Fixture Use Hour**, press the **ENTER** button to confirm, fixture use time will show on the display, press the **MENU** button to exit.

Temperature

Select **Temperature**, press the **ENTER** button to confirm, fixture temperature will show on the display, press the **MENU** button to exit.

Fan State

Select **Fan State**, press the **ENTER** button to confirm, fixture fan state will show on the display, press the **MENU** button to exit.

Firmware Version

Select **Firmware Version**, press the **ENTER** button to confirm, firmware version will show on the display, press the **MENU** button back to exit.

RDM UID

To select **RDM UID**, press the **ENTER** button to confirm, RDM UID will show on the display, press the **MENU** button back to exit.

Error Logs

Select **Error Logs**, press the **ENTER** button to confirm. Use the **UP**/**DOWN** button to select **Fixture Errors** or **Reset Error Log**, press the **ENTER** button to store. Select **Reset Error Log**, press the **ENTER** button to confirm. Use the **UP**/**DOWN** button to select **No** or **Yes**, press the **ENTER** button to store. Select **Yes**, press the **ENTER** button to confirm. Use the **UP**/**DOWN** button to set the password **050**, press the **ENTER** button to store. Press the **MENU** button back to the last menu or let the unit idle 30 seconds to exit menu mode.

Reset Functions

To select **Reset Functions**, press the **ENTER** button to confirm, use the **UP**/**DOWN** button to select **Pan & Tilt, Effect** or **All.**

Pan & Tilt

Select **Pan & Tilt**, press the **ENTER** button to confirm, use the **UP/DOWN** button to select **No**(normal) or **Yes** (the unit will run built-in program to reset pan and tilt to their home positions), press the **ENTER** button to store. Press the **MENU** button to exit.

Effect

Select **Effect,** press the **ENTER** button to confirm, use the **UP/DOWN** button to select **No**(normal) or **Yes** (the unit will run built-in program to reset effect to their home positions), press the **ENTER** button to store. Press the **MENU** button to exit.

All

Select **All,** press the **ENTER** button to confirm, use the **UP**/**DOWN** button to select **No**(normal) or **Yes** (the unit will run built-in program to reset all motors to their home positions), press **ENTER** button to store. Press the **MENU** button to exit.

Special Functions

Factory Settings

Select **Factory Settings,** press the **ENTER** button to confirm, use the **UP**/**DOWN** button to select **No**(normal) or **Yes** (the fixture will reset to factory settings), press **ENTER** button to store. Press the **MENU** button to exit.

RDM FUNCTIONS

Select the MANUFACTURER menu to display the manufacturer of the fixture.

Select the SOFTWARE VERSION menu and the program version number of the fixture will be displayed.

Select the DMX START ADDRESS menu to change the DMX 512 address (001-512).

Select the DEVICE MODEL DESCRIPTION menu to display the model of the fixture.

Select the DEVICE LABEL menu to change the model of the fixture.

Select the DMX PERSONALITY menu to set the channel mode of the fixture (30⁄32 channel).

Select the DMX PERSONALITY DESCRIPTION menu to display the current channel mode of the fixture.

Select the DEVICE HOURS menu to display the running time of the fixture.

Select the PAN INVERT menu and the fixture will run the pan invert mode.

Select the TILT INVERT menu and the fixture will run the tilt invert mode.

Select the RESET DEVICE menu, the WARM RESET/COLD RESET option will be displayed. When WARM RESET is selected, the fixture will start a warm reset, and exit when COLD RESET is selected.

5.2 Home Position Adjustment

Press the MENU button into menu mode, then press the ENTER button for about 3 seconds into offset mode to adjust the home position. Select the function by pressing the ENTER button. Use the UP/DOWN button to choose the submenu, press the ENTER button to store and automatically return to the last menu. Press MENU button to exit.

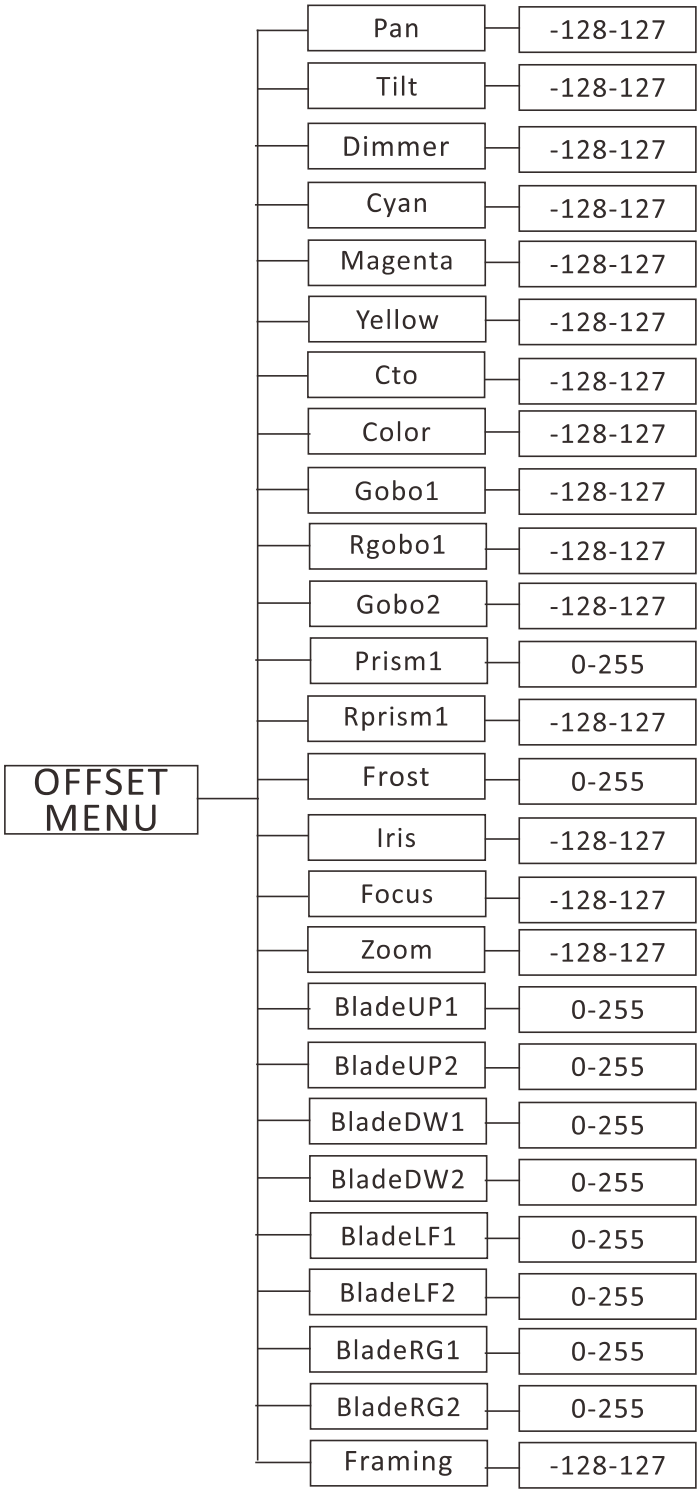

Pan

Enter offset mode, Select **Pan**, press the **ENTER** button to confirm, the present position will blink on the display, use the **UP/DOWN** button to offset the value from -128 to 127, press the **ENTER** button to store. Press the **MENU** button to exit.

Tilt

Enter offset mode, Select **Tilt**, press the **ENTER** button to confirm, the present position will blink on the display, use the **UP/DOWN** button to offset the value from -128 to 127, press the **ENTER** button to store. Press the **MENU** button to exit.

Dimmer

Enter offset mode, Select **Dimmer**, press the **ENTER** button to confirm, the present position will blink on the display, use the **UP/DOWN** button to offset the value from -128 to 127, press the **ENTER** button to store. Press the **MENU** button to exit.

Cyan

Enter offset mode, Select **Cyan**, press the **ENTER** button to confirm, the present position will blink on the display, use the **UP/DOWN** button to offset the value from -128 to 127, press the **ENTER** button to store. Press the **MENU** button to exit.

Magenta

Enter offset mode, Select **Magenta**, press the **ENTER** button to confirm, the present position will blink on the display, use the **UP/DOWN** button to offset the value from -128 to 127, press the **ENTER** button to store. Press the **MENU** button to exit.

Yellow

Enter offset mode, Select **Yellow**, press the **ENTER** button to confirm, the present position will blink on the display, use the **UP/DOWN** button to offset the value from -128 to 127, press the **ENTER** button to store. Press the **MENU** button to exit.

Cto

Enter offset mode, Select **Cto**, press the **ENTER** button to confirm, the present position will blink on the display, use the **UP/DOWN** button to offset the value from -128 to 127, press the **ENTER** button to store. Press the **MENU** button to exit.

Color

Enter offset mode, Select **Color**, press the **ENTER** button to confirm, the present position will blink on the display, use the **UP/DOWN** button to offset the value from -128 to 127, press the **ENTER** button to store. Press the **MENU** button to exit.

Gobo1

Enter offset mode, Select **Gobo1**, press the **ENTER** button to confirm, the present position will blink on the display, use the **UP/DOWN** button to offset the value from -128 to 127, press the **ENTER** button to store. Press the **MENU** button to exit.

R-Gobo1

Enter offset mode, Select **R-Gobo1**, press the **ENTER** button to confirm, the present position will blink on the display, use the **UP/DOWN** button to offset the value from -128 to 127, press the **ENTER** button to store. Press the **MENU** button to exit.

Gobo2

Enter offset mode, Select **Gobo2**, press the **ENTER** button to confirm, the present position will blink on the display, use the **UP/DOWN** button to offset the value from -128 to 127, press the **ENTER** button to store. Press the **MENU** button to exit.

Prism1

Enter offset mode, Select **Prism1**, press the **ENTER** button to confirm, the present position will blink on the display, use the **UP/DOWN** button to offset the value from 0 to 255, press the **ENTER** button to store. Press the **MENU** button to exit.

R-Prism1

Enter offset mode, Select **R-Prism1**, press the **ENTER** button to confirm, the present position will blink on the display, use the **UP/DOWN** button to offset the value from -128 to 127, press the **ENTER** button to store. Press the **MENU** button to exit.

Frost

Enter offset mode, Select **Frost**, press the **ENTER** button to confirm, the present position will blink on the display, use the **UP/DOWN** button to offset the value from 0 to 255, press the **ENTER** button to store. Press the **MENU** button to exit.

Iris

Enter offset mode, Select **Iris**, press the **ENTER** button to confirm, the present position will blink on the display, use the **UP**/**DOWN** button to offset the value from -128 to 127, press the **ENTER** button to store. Press the **MENU** button to exit.

Focus

Enter offset mode, Select **Focus**, press the **ENTER** button to confirm, the present position will blink on the display, use the **UP**/**DOWN** button to offset the value from -128 to 127, press the **ENTER** button to store. Press the **MENU** button to exit.

Zoom

Enter offset mode, Select **Zoom**, press the **ENTER** button to confirm, the present position will blink on the display, use the **UP**/**DOWN** button to offset the value from -128 to 127, press the **ENTER** button to store. Press the **MENU** button to exit.

BladeUP1

Enter offset mode, Select **BladeUP1**, press the **ENTER** button to confirm, the present position will blink on the display, use the **UP**/**DOWN** button to offset the value from 0 to 255, press the **ENTER** button to store. Press the **MENU** button to exit.

BladeUP2

Enter offset mode, Select **BladeUP2**, press the **ENTER** button to confirm, the present position will blink on the display, use the **UP**/**DOWN** button to offset the value from 0 to 255, press the **ENTER** button to store. Press the **MENU** button to exit.

BladeDW1

Enter offset mode, Select **BladeDW1**, press the **ENTER** button to confirm, the present position will blink on the display, use the **UP**/**DOWN** button to offset the value from 0 to 255, press the **ENTER** button to store. Press the **MENU** button to exit.

BladeDW2

Enter offset mode, Select **BladeDW2**, press the **ENTER** button to confirm, the present position will blink on the display, use the **UP**/**DOWN** button to offset the value from 0 to 255, press the **ENTER** button to store. Press the **MENU** button to exit.

BladeLF1

Enter offset mode, Select **BladeLF1**, press the **ENTER** button to confirm, the present position will blink on the display, use the **UP**/**DOWN** button to offset the value from 0 to 255, press the **ENTER** button to store. Press the **MENU** button to exit.

BladeLF2

Enter offset mode, Select **BladeLF2**, press the **ENTER** button to confirm, the present position will blink on the display, use the **UP**/**DOWN** button to offset the value from 0 to 255, press the **ENTER** button to store. Press the **MENU** button to exit.

BladeRG1

Enter offset mode, Select **BladeRG1**, press the **ENTER** button to confirm, the present position will blink on the display, use the **UP**/**DOWN** button to offset the value from 0 to 255, press the **ENTER** button to store. Press the **MENU** button to exit.

BladeRG2

Enter offset mode, Select **BladeRG2**, press the **ENTER** button to confirm, the present position will blink on the display, use the **UP**/**DOWN** button to offset the value from 0 to 255, press the **ENTER** button to store. Press the **MENU** button to exit.

Framing

Enter offset mode, Select **Framing**, press the **ENTER** button to confirm, the present position will blink on the display, use the **UP**/**DOWN** button to offset the value from -128 to 127, press the **ENTER** button to store. Press the **MENU** button to exit.

6. Control By Universal DMX Controller

6.1 DMX512 Connection

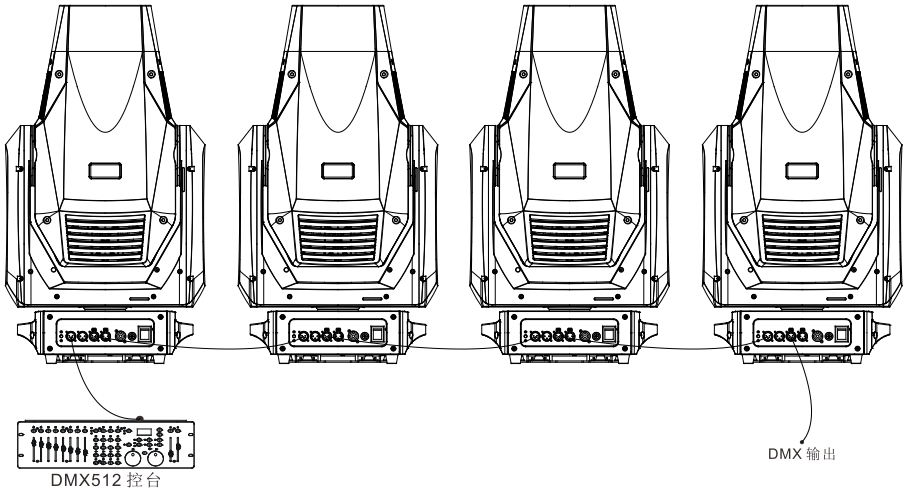

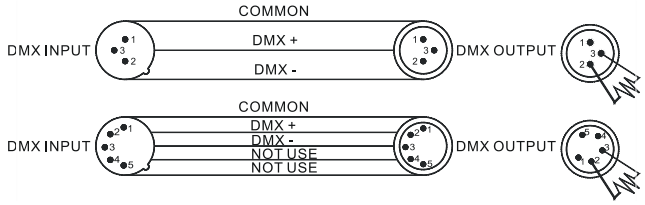

1. At last unit, the DMX cable has to be terminated with a terminator. Solder a 120-ohm 1⁄4W resistor between pin 2(DMX-) and pin 3(DMX+) into a 3-pin XLR-plug and plug it in the DMX-output of the last unit.
2. Connect the unit together in a “daisy chain” by XLR plug cable from the output of the unit to the input of the next unit. The cable cannot be branched or split to a “Y” cable. DMX 512 is a very high-speed signal. Inadequate or damaged cables, soldered joints or corroded connectors can easily distort the signal and shut down the system.
3. The DMX output and input connectors are pass-through to maintain the DMX circuit, when one of the units’ power is disconnected.
4. Each lighting unit needs to have a DMX address to receive the data by the controller. The address number is between 1-512.
5. The end of the DMX 512 system should be terminated to reduce signal errors.
6. 3 pin XLR connectors are more popular than 5 pins XLR.

   3 pin XLR: Pin 1: GND, Pin 2: Negative signal (-), Pin 3: Positive signal (+)

   5 pin XLR: Pin 1: GND, Pin 2: Negative signal (-), Pin 3: Positive signal (+), Pin4, Pin5 not used.

6.2 Address Setting

If you use a universal DMX controller to control the units, you have to set DMX address from 1 to 512 so that the units can receive DMX signal.

Press the MENU button to enter menu mode, select DMX Settings, press the ENTER button to confirm, use the UP/DOWN button to select DMX Address, press the ENTER button to confirm, the present address will blinking the display, use the UP/DOWN button to adjust the address from 001 to 512, press the ENTER button to store. Press the MENU button back to the last menu or let the unit idle 30 seconds to exit menu mode.

Please refer to the following diagram to address your DMX512 channel for the first 4 units.

Channel mode	Unit 1 Address	Unit 2 Address	Unit 3 Address	Unit 4 Address
30 Channels	1	31	61	91
32 Channels	1	33	65	97

6.3 DMX512 Configuration

Please control the fixture by referring to the configurations below

Attentions:

1. The unit will maintain the last condition until reset if you cut-off the DMX signal.
2. For the channel Function, keep the value for about 3 seconds, then the corresponding function will take into effect.

30 Channels (Mode 1):

CHANNEL	VALUE	FUNCTION
1	000-255	**PAN** 0°→540°
2	000-255	**TILT** 0°→270°
3	000-255	**PAN/TILT SPEED** Fast to Slow
4	000-255	**CYAN** 0%→100%

5	000-255	**MAGENTA** 0%→100%
6	000-255	**YELLOW** 0%→100%
7	000-255	**CTO** 0%→100%
8		**COLOR**
	000-009	Open
	010-018	Color 1
	019-027	Color 2
	028-036	Color 3
	037-045	Color 4
	046-054	Color 5
	055-063	Color 6
	064-127	Color Index
	128-190	Counter-Clockwise Rotation, Fast to Slow
	191-192	Stop
	193-255	Clockwise Rotation, Slow to Fast
9		**GOBO 1**
	000-009	Open
	010-018	Gobo 1
	019-027	Gobo 2
	028-036	Gobo 3
	037-045	Gobo 4
	046-054	Gobo 5
	055-063	Gobo 6
	064-074	Gobo 1 Shaking
	075-085	Gobo 2 Shaking
	086-096	Gobo 3 Shaking
	097-107	Gobo 4 Shaking
	108-118	Gobo 5 Shaking
	119-127	Gobo 6 Shaking
	128-190	Clockwise Rotation, Fast to Slow
	191-192	Stop
	193-255	Counter-Clockwise Rotation, Slow to Fast
10		**GOBO 1 ROTATION**
	000-127	Index: 0°→360°
	128-190	Clockwise Rotation, Fast to Slow
	191-192	Stop
	193-255	Counter-Clockwise Rotation, Slow to Fast
11		**GOBO 2**
	000-007	Open
	008-014	Gobo 1

	015-021	Gobo 2
	022-028	Gobo 3
	029-035	Gobo 4
	036-042	Gobo 5
	043-049	Gobo 6
	050-056	Gobo 7
	057-063	Gobo 8
	064-071	Gobo 1 Shaking
	072-079	Gobo 2 Shaking
	080-087	Gobo 3 Shaking
	088-095	Gobo 4 Shaking
	096-103	Gobo 5 Shaking
	104-111	Gobo 6 Shaking
	112-119	Gobo 7 Shaking
	120-127	Gobo 8 Shaking
	128-190	Clockwise Rotation, Fast to Slow
	191-192	Stop
	193-255	Counter-Clockwise Rotation, Slow to Fast
12		**IRIS**
	000-255	0%→100%
13		**PRISM(4-facet prism)**
	000-007	Null
	008-255	Prism
14		**PRISM ROTATION**
	000-127	Index: 0°→360°
	128-190	Clockwise Rotation, Fast to Slow
	191-192	Stop
	193-255	Counter-Clockwise Rotation, Slow to Fast
15		**FROST**
	000-255	0%→100%
16		**ZOOM**
	000-255	42°→7°
17		**FOCUS**
	000-255	0%→100%
18		**STROBE**
	000-007	Close
	008-015	Open
	016-131	Strobe from Slow to Fast
	132-139	Open
	140-181	Fast Close Slow Open
	182-189	Open
	190-231	Fast Open Slow Close
	232-239	Open

	240-247 248-255	Random Strobe Open
19	000-255	**DIMMER** 0%→100%
20	000-255	**DIMMER FINE**
21	000-255	**BLADE** 0°→180°
22	000-255	**BLADE UP 1** 0%→100%
23	000-255	**BLADE UP 2** 0%→100%
24	000-255	**BLADE DW 1** 0%→100%
25	000-255	**BLADE DW 2** 0%→100%
26	000-255	**BLADE LF 1** 0%→100%
27	000-255	**BLADE LF 2** 0%→100%
28	000-255	**BLADE RG 1** 0%→100%
29	000-255	**BLADE RG 2** 0%→100%
30		**SPECIAL FUNCTION**
	000-029	Null
	030-039	Dimmer Curve Square Law
	040-049	Dimmer Curve Inv Square Law
	050-059	Dimmer Curve Linear
	060-069	Dimmer Curve S
	070-079	Blackout While Pan/Tilt Move Enable
	080-089	Blackout While Pan/Tilt Move Disable
	090-099	Blackout While Color Change Enable
	100-109	Blackout While Color Change Disable
	110-119	Blackout While Gobo Change Enable
	120-129	Blackout While Gobo Change Disable
	130-139	Focus Compensate Disable
	140-149	Focus Compensate Near
	150-159	Focus Compensate Medium
	160-169	Focus Compensate Far
	170-179	Dimmer Speed Default
	180-189	Dimmer Speed Fast
	190-199	Dimmer Speed Smooth

	200-209 210-219 220-229 230-255	Reset All Reset Effect Reset Pan/Tilt Null

32 Channels (Mode 2):

CHANNEL	VALUE	FUNCTION
1	000-255	**PAN** 0°→540°
2	000-255	**PAN FINE**
3	000-255	**TILT** 0°→270°
4	000-255	**TILT FINE**
5	000-255	**PAN/TILT SPEED** Fast to Slow
6	000-255	**CYAN** 0%→100%
7	000-255	**MAGENTA** 0%→100%
8	000-255	**YELLOW** 0%→100%
9	000-255	**CTO** 0%→100%
10	000-009 010-018 019-027 028-036 037-045 046-054 055-063 064-127 128-190 191-192 193-255	**COLOR** Open Color 1 Color 2 Color 3 Color 4 Color 5 Color 6 Color Index Counter-Clockwise Rotation, Fast to Slow Stop Clockwise Rotation, Slow to Fast
11	000-009 010-018 019-027	**GOBO 1** Open Gobo 1 Gobo 2

	028-036	Gobo 3
	037-045	Gobo 4
	046-054	Gobo 5
	055-063	Gobo 6
	064-074	Gobo 1 Shaking
	075-085	Gobo 2 Shaking
	086-096	Gobo 3 Shaking
	097-107	Gobo 4 Shaking
	108-118	Gobo 5 Shaking
	119-127	Gobo 6 Shaking
	128-190	Clockwise Rotation, Fast to Slow
	191-192	Stop
	193-255	Counter-Clockwise Rotation, Slow to Fast
12		**GOBO 1 ROTATION**
	000-127	Index: 0°→360°
	128-190	Clockwise Rotation, Fast to Slow
	191-192	Stop
	193-255	Counter-Clockwise Rotation, Slow to Fast
13		**GOBO 2**
	000-007	Open
	008-014	Gobo 1
	015-021	Gobo 2
	022-028	Gobo 3
	029-035	Gobo 4
	036-042	Gobo 5
	043-049	Gobo 6
	050-056	Gobo 7
	057-063	Gobo 8
	064-071	Gobo 1 Shaking
	072-079	Gobo 2 Shaking
	080-087	Gobo 3 Shaking
	088-095	Gobo 4 Shaking
	096-103	Gobo 5 Shaking
	104-111	Gobo 6 Shaking
	112-119	Gobo 7 Shaking
	120-127	Gobo 8 Shaking
	128-190	Clockwise Rotation, Fast to Slow
	191-192	Stop
	193-255	Counter-Clockwise Rotation, Slow to Fast
14		**IRIS**
	000-255	0%→100%
15		**PRISM(4-facet prism)**
	000-007	Null

	008-255	Prism
16	000-127 128-190 191-192 193-255	**PRISM ROTATION** Index: 0°→360° Clockwise Rotation, Fast to Slow Stop Counter-Clockwise Rotation, Slow to Fast
17	000-255	**FROST** 0%→100%
18	000-255	**ZOOM** 42°→7°
19	000-255	**FOCUS** 0%→100%
20	000-007 008-015 016-131 132-139 140-181 182-189 190-231 232-239 240-247 248-255	**STROBE** Close Open Strobe from Slow to Fast Open Fast Close Slow Open Open Fast Open Slow Close Open Random Strobe Open
21	000-255	**DIMMER** 0%→100%
22	000-255	**DIMMER FINE**
23	000-255	**BLADE** 0°→180°
24	000-255	**BLADE UP 1** 0%→100%
25	000-255	**BLADE UP 2** 0%→100%
26	000-255	**BLADE DW 1** 0%→100%
27	000-255	**BLADE DW 2** 0%→100%
28	000-255	**BLADE LF 1** 0%→100%
29	000-255	**BLADE LF 2** 0%→100%
30		**BLADE RG 1**

	000-255	0%→100%
31	000-255	**BLADE RG 2** 0%→100%
32		**SPECIAL FUNCTION**
	000-029	Null
	030-039	Dimmer Curve Square Law
	040-049	Dimmer Curve Inv Square Law
	050-059	Dimmer Curve Linear
	060-069	Dimmer Curve S
	070-079	Blackout While Pan/Tilt Move Enable
	080-089	Blackout While Pan/Tilt Move Disable
	090-099	Blackout While Color Change Enable
	100-109	Blackout While Color Change Disable
	110-119	Blackout While Gobo Change Enable
	120-129	Blackout While Gobo Change Disable
	130-139	Focus Compensate Disable
	140-149	Focus Compensate Near
	150-159	Focus Compensate Medium
	160-169	Focus Compensate Far
	170-179	Dimmer Speed Default
	180-189	Dimmer Speed Fast
	190-199	Dimmer Speed Smooth
	200-209	Reset All
	210-219	Reset Effect
	220-229	Reset Pan/Tilt
	230-255	Null

7. Error Information

Error codes are shown continuously in the display when the fixture fails and they will not disappear until the fixture is repaired.

1. CPU-B/C/D/E/F/G/H Error

Check whether the 485 (DATA) leads on the PCB board are installed in place or disconnected.

Check whether the related 485 (DATA) signal circuit on the PCB board is damaged.

2. Pan Reset Error

Check whether the position of the pan where the magnet is installed falls off or is damaged.

Check whether there are obstacles in the pan operating range.

Check whether the Hall element on the pan is damaged.

Check whether the lead connecting the Hall element on the pan and the PCB board is in poor contact or disconnected.

Check whether the motor on the pan is damaged.

Check whether the related circuit of the motor drive board on the pan is damage.

3. Pan Encode Error

Check whether the encoder on the pan is damaged.

Check whether the lead connecting the encoder on the pan and the PCB board is in poor contact or disconnected.

4. Tilt Reset Error

Check whether the position of the tilt where the magnet is installed falls off or is damaged.

Check whether there are obstacles in the tilt operating range.

Check whether the Hall element on the tilt is damaged.

Check whether the lead connecting the Hall element on the tilt and the PCB board is in poor contact or disconnected.

Check whether the motor on the tilt is damaged.

Check whether the related circuit of the motor drive board on the tilt is damage.

5. Tilt Encode Error

Check whether the encoder on the tilt is damaged.

Check whether the lead connecting the encoder on the tilt and the PCB board is in poor contact or disconnected.

6. Cyan Reset Error

Check whether the position of the cyan color wheel where the magnet is installed falls off or is damaged.

Check whether there are obstacles in the cyan color wheel operating range.

Check whether the Hall element on the cyan color wheel is damaged.

Check whether the lead connecting the Hall element on the cyan color wheel and the PCB board is in poor contact or disconnected.

Check whether the motor on the cyan color wheel is damaged.

Check whether the related circuit of the motor drive board on the cyan color wheel is damage.

7. Magenta Error

Check whether the position of the magenta color wheel where the magnet is installed falls off or is damaged.

Check whether there are obstacles in the magenta color wheel operating range.

Check whether the Hall element on the magenta color wheel is damaged.

Check whether the lead connecting the Hall element on the magenta color wheel and the PCB board is in poor contact or disconnected.

Check whether the motor on the magenta color wheel is damaged.

Check whether the related circuit of the motor drive board on the magenta color wheel is damage.

8. Yellow Error

Check whether the position of the yellow color wheel where the magnet is installed falls off or is damaged.

Check whether there are obstacles in the yellow color wheel operating range.

Check whether the Hall element on the yellow color wheel is damaged.

Check whether the lead connecting the Hall element on the yellow color wheel and the PCB board is in poor contact or disconnected.

Check whether the motor on the yellow color wheel is damaged.

Check whether the related circuit of the motor drive board on the yellow color wheel is damage.

9. Cto Error

Check whether the position of the cto where the magnet is installed falls off or is damaged.

Check whether there are obstacles in the cto operating range.

Check whether the Hall element on the cto is damaged.

Check whether the lead connecting the Hall element on the cto and the PCB board is in poor contact or disconnected.

Check whether the motor on the cto is damaged.

Check whether the related circuit of the motor drive board on the cto is damage.

10. Color 1 Error

Check whether the position of the color wheel where the magnet is installed falls off or is damaged.

Check whether there are obstacles in the color wheel operating range.

Check whether the Hall element on the color wheel is damaged.

Check whether the lead connecting the Hall element on the color wheel and the PCB board is in poor contact or disconnected.

Check whether the motor on the color wheel is damaged.

Check whether the related circuit of the motor drive board on the color wheel is damage.

11. Gobo1/2 Error

Check whether the position of the gobo wheel1/2 where the magnet is installed falls off or is damaged.

Check whether there are obstacles in the gobo wheel1/2 operating range.

Check whether the Hall element on the gobo wheel1/2 is damaged.

Check whether the lead connecting the Hall element on the gobo wheel1/2 and the PCB board is in poor contact or disconnected.

Check whether the motor on the gobo wheel1/2 is damaged.

Check whether the related circuit of the motor drive board on the gobo wheel1/2 is damage.

12. R-Gobo1 Error

Check whether the position of the gobo wheel1 where the magnet is installed falls off or is damaged.

Check whether there are obstacles in the gobo wheel1 operating range.

Check whether the Hall element on the gobo wheel1 is damaged.

Check whether the lead connecting the Hall element on the gobo wheel1 and the PCB board is in poor contact or disconnected.

Check whether the motor on the gobo wheel1 is damaged.

Check whether the related circuit of the motor drive board on the gobo wheel1 is damage.

13. Blade Error

Check whether the position of the blade where the magnet is installed falls off or is damaged.

Check whether there are obstacles in the blade operating range.

Check whether the Hall element on the blade is damaged.

Check whether the lead connecting the Hall element on the blade and the PCB board is in poor contact or disconnected.

Check whether the motor on the blade is damaged.

Check whether the related circuit of the motor drive board on the blade is damage.

14. Prism Error

Check whether the position of the prism where the magnet is installed falls off or is damaged.

Check whether there are obstacles in the prism operating range.

Check whether the Hall element on the prism is damaged.

Check whether the lead connecting the Hall element on the prism and the PCB board is in poor contact or disconnected.

Check whether the motor on the prism is damaged.

Check whether the related circuit of the motor drive board on the prism is damage.

15. R-Prism Error

Check whether the position of the prism where the magnet is installed falls off or is damaged.

Check whether there are obstacles in the prism operating range.

Check whether the Hall element on the prism is damaged.

Check whether the lead connecting the Hall element on the prism and the PCB board is in poor contact or disconnected.

Check whether the motor on the prism is damaged.

Check whether the related circuit of the motor drive board on the prism is damage.

16. Focus Error

Check whether the position of the focus where the magnet is installed falls off or is damaged.

Check whether there are obstacles in the focus operating range.

Check whether the Hall element on the focus is damaged.

Check whether the lead connecting the Hall element on the focus and the PCB board is in poor contact or disconnected.

Check whether the motor on the focus is damaged.

Check whether the related circuit of the motor drive board on the focus is damage.

17. Zoom Error

Check whether the position of the zoom where the magnet is installed falls off or is damaged.

Check whether there are obstacles in the zoom operating range.

Check whether the Hall element on the zoom is damaged.

Check whether the lead connecting the Hall element on the zoom and the PCB board is in poor contact or disconnected.

Check whether the motor on the zoom is damaged.

Check whether the related circuit of the motor drive board on the zoom is damage.

18. Led Fan1/2/3/4 Error

Check whether the fan is not running.

Check whether the fan leads are installed in place or disconnected.

Check whether the fan is damaged.

Check whether there are obstacles in the fan operating range.

Check whether the fan circuit on the motherboard breaks down.

Check whether the component is damaged.

19. Temperature Error

Check whether the temperature detecting board is normal.

Check whether the components of the temperature detecting board are damaged.

Check whether the lead on the temperature detecting board is installed in place or disconnected.

8. Troubleshooting

Following are a few common problems that may occur during operation. Here are some suggestions for troubleshooting:

A. The unit does not work, no light and the fan does not work

1. Check the connected power.
2. Measure the voltage.
3. Check the power indicator to see whether it can be lit up or not.

B. Not responding to the DMX controller

1. Check whether the DMX connectors and the DMX cables are connected correctly.
2. Check whether the DMX address is correctly set.
3. If the intermittent DMX signal problem occurs, check whether the XLR socket and the signal cable are well connected.
4. Try it with another DMX controller.
5. Check whether the DMX cables run near or alongside to the high-voltage cables, which may damage or interfere with the signal circuit.

C. One of the channels is not working well

1. The stepper motor might be damaged or the cable connected to the PCB might be broken.
2. The motor's drive IC on the PCB might be out of condition.

9. Fixture Cleaning

It is absolutely essential that the fixture is kept clean to ensure the maximum light-output and allow the fixture to function reliably throughout its life. The fixture must be cleaned regularly to avoid dust, dirt and smoke-fluid residues building up on or within the fixture. The cleaning frequency depends on the application environment. Clean the fixture immediately if the dust enters it to avoid damage to the optical lens due to excessive dust.

- A soft lint-free cloth moistened with any good glass cleaning fluid is recommended, under no circumstances should solvents be used.
- Always dry the parts carefully.
- Clean the external optical lens at least every 20 days and the internal optical lens every 30 days.

Declaration of Conformity

We declare that our products (lighting equipments) comply with the following specification and bears CE mark in accordance with the provision of the Electromagnetic Compatibility (EMC) Directive 2014/30/EU.

EN 55032: 2015; EN 61000-3-2: 2014;
EN 61000-3-3: 2013; EN 55103-2: 2009

&

Harmonized Standard

EN 60598-1:2015; EN 60598-2-17: 1989+A2: 1991;
EN 62493: 2015
Safety of household and similar electrical appliances
Part 1: General requirements

Innovation, Quality, Performance