LEO™

XP 550 BSW II

FEATURES

- Diameter of lens: 165 mm
- Lamp life:4000 hours*
- Motorized focus
- Linear CMY color mixing
- Variable CTO: 3200K-7800K
- 1 x color wheel with 14 fixed colors plus open, and rainbow effect
- 1 x static gobo wheel with 16 gobos plus open
- 1 x rotating gobo wheel with 7 gobos plus open, convenient replacement
- Outside diameter: 22.5mm
- Image diameter: 12mm
- 1 x animation wheel with outstanding water and flame effect, the wheel can be replaced.
- 2x prisms: 8-facets prism+6-facets linear prism, rotatable in both directions and overlayable
- Smooth dimming from 0-100%
- Outstanding strobe effect with variable speed
- Independent frost effect
- 2x fixed clamps for 50mm truss

TECHNICAL SPECIFICATIONS

Specifications

- Light Source: Philips MSD Platinum 500L Flex
- Color Temperature: 7,800 K
- Beam Mode: 2°-7°
- Spot Mode: 5°-34°
- Wash Mode: 8°-70°

Control

- DMX Channel: 26/19 channels
- Protocols: DMX512, RDM , Art-Net
- Firmware upgrade via DMX link or USB Disks

Pan/Tilt

- Pan/Tilt movement: 540°/ 270°
- Pan/Tilt Resolution: 16-bit
- Fixation: Tilt lock

Construction

- Display: LCD display
- Battery backup for user setup without mains connection
- Data In/Out: 3-pin and 5-pin XLR, RJ45
- Power In/Out: Power Connector in/out
- Protection Rating: IP20

Electrical and Physical

- Input voltage range: AC 100~240V, 50/60Hz
- Power Consumption: 750W
- Dimensions: 402x308x725mm (15.8"x12.1"x28.5")
- F/C Dimensions: 870 x 520 x 950 mm (34.3" x 20.5 " x 37.4")
- Weight: 30.5kg (67.2lbs)
  110kg (242.5lbs)(Dual Loader Case)

(*Lamp's working life depends on the cycle ratio of its usage pattern and other environmental factors, such as dust, oil, temperature, humidity, etc.)

PHOTOMETRICS DIAGRAM

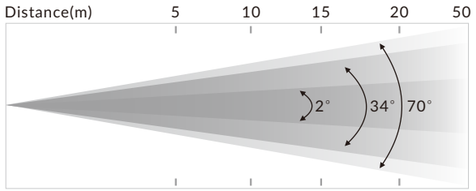

2° Lux	2,100,000	525,000	233,333	131,250	21,000
Diameter(m)	0.2	0.6	0.5	0.7	2
34° Lux	14,500	3,625	1,611	906	145
Diameter(m)	3.0	6.0	8.9	11.9	30
70° Lux	4,200	1,050	466	262	42
Diameter(m)	6.4	12.7	19.1	25.5	64

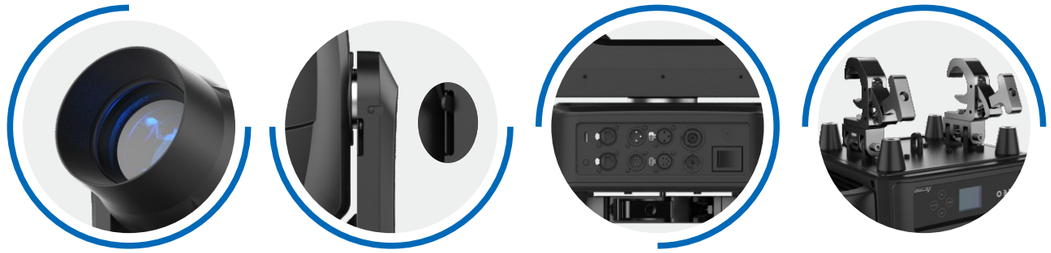

FUNCTIONAL EFFECT

CMY+CTO

Color Wheel

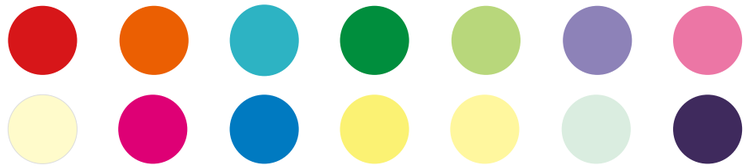

Static Gobo Wheel

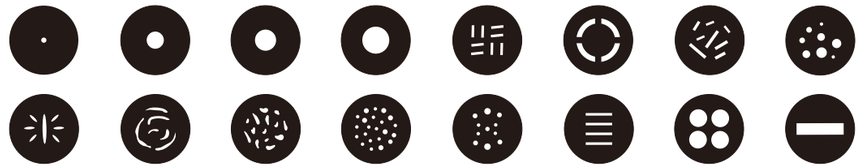

Rotating Gobo Wheel

Animation Wheel 8-Facet Prism 6-Facet Linear Prism Frost Filter

DIMENSIONS mm (in.)

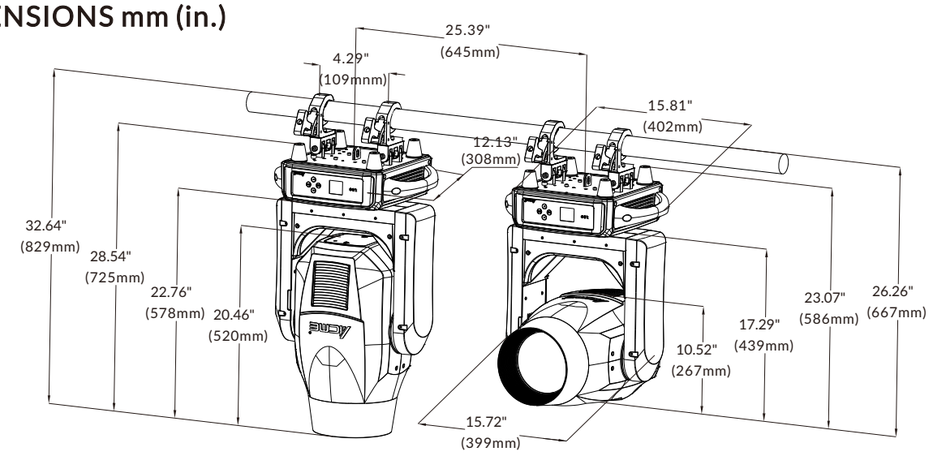

CONCERT / TOURING

CONCERT / TOURING