STAGE PAR 100 IP CW/WW™
STAGE PAR COLOUR IP™

LED-PAR100 CW IP / LED-PAR100 WW IP/ LED-PAR100 RGBA IP

FEATURES

- Color Rendering: Ra≥90(WW/CW)
- Outstanding color mixing effect(RGBA)
- High brightness, energy saving, can replace the traditional 1000W Par lights
- 9°/15°/20°/25°/30°angle can be manually switched(WW/CW)
- 7°/11.5°/16°/20.5°/25°angle can be manually switched(RGBA)
- 0-100% smooth dimming
- Outstanding strobe effect with variable speed
- Standard with color gel frame,optional barn door

TECHNICAL SPECIFICATIONS

Specifications

- Light Source：1 x 100 W WW/CW LED module(WW/CW)
  1 x 120 W RGBA LED module(RGBA)
- Color Temperature：3,000 K/ 5,700 K(WW/CW)
- Angle： Beam Angle:9°/15°/20°/25°/30°(WW/CW)
  Field Angle:15.7°/21°/28.3°/41.6°/50.9°(WW/CW)
  Beam Angle:7°/11.5°/16°/20.5°/25°(RGBA)
- Total Lumen output：4,973 lm(WW/CW)
  1,913 lm(RGBA)

Control

- DMX channel：1/2/3 channels(WW/CW)
  4/6/7/8 channels(RGBA)
- Control Mode：DMX512, RDM
- Firmware Upgrade via DMX link

Construction

- Display：Seven-segment display
- Data In/Out：3-pin or 5-pin IP XLR
- Power In/Out: Direct Power cord out
- Protection Rating: IPX4

Electrical and Physical

- Input Voltage Range: 100-240V~ 50/60Hz
- Power Consumption: 105 W(WW/CW)
  110 W(RGBA)
- Dimensions: 564 x 282.5 x 256mm(22.2"x11.1"x10.1")
- F/C Dimensions：1,217 x 544 x 882 mm(47.9" x 21.4" x 34.7")
- Weight: 4.5 kg (9.9 lbs)
  91 kg (200.6 lbs)(Eight-pack Loader Case)

PHOTOMETRICS DIAGRAM

WW/CW

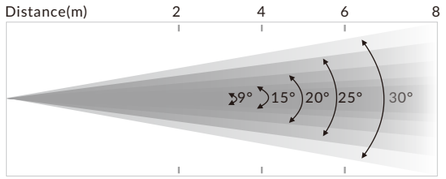

9°Lux	WW	42,860	10,120	4,729	2,576
	CW	50,070	12,560	5,566	3,017
15°Lux	WW	17,360	3,895	2,254	1,100
	CW	18,000	5,410	2,431	1,421
20°Lux	WW	9,030	2,484	1,237	700
	CW	11,120	3,309	1,490	872
25°Lux	WW	6,170	1,550	774	448
	CW	7,700	2,060	1,045	546
30°Lux	WW	4,170	1,114	556	334
	CW	5,409	1,430	757	406

RGBA

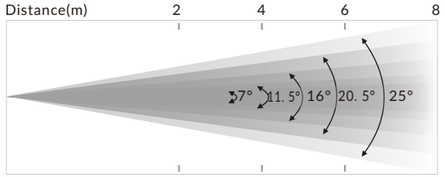

7°Lux	RGBA	1,5450	4,103	1,780	1,040
11. 5°Lux	RGBA	6,510	1,862	902	522
16°Lux	RGBA	4,044	1,144	566	323
20. 5°Lux	RGBA	2,550	725	352	200
25°Lux	RGBA	1,828	530	256	146

LIGHT QUALITY PARAMETER

CIE1931 CHROMATICITY COORDINATES
(Big Angle)

(WW)

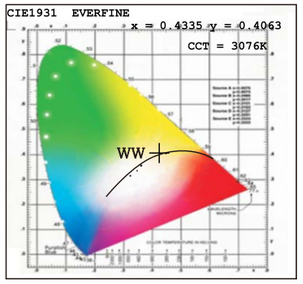

(CW)

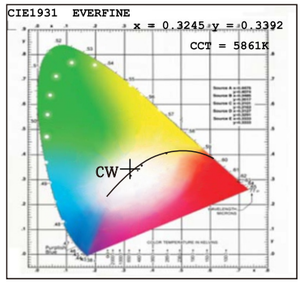

LUMINOUS INTENSITY DISTRIBUTION DIAGRAM

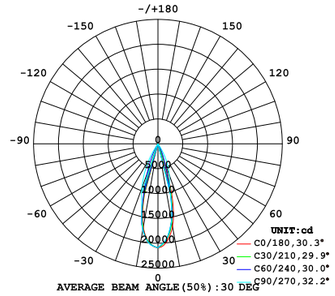

DIMENSIONS

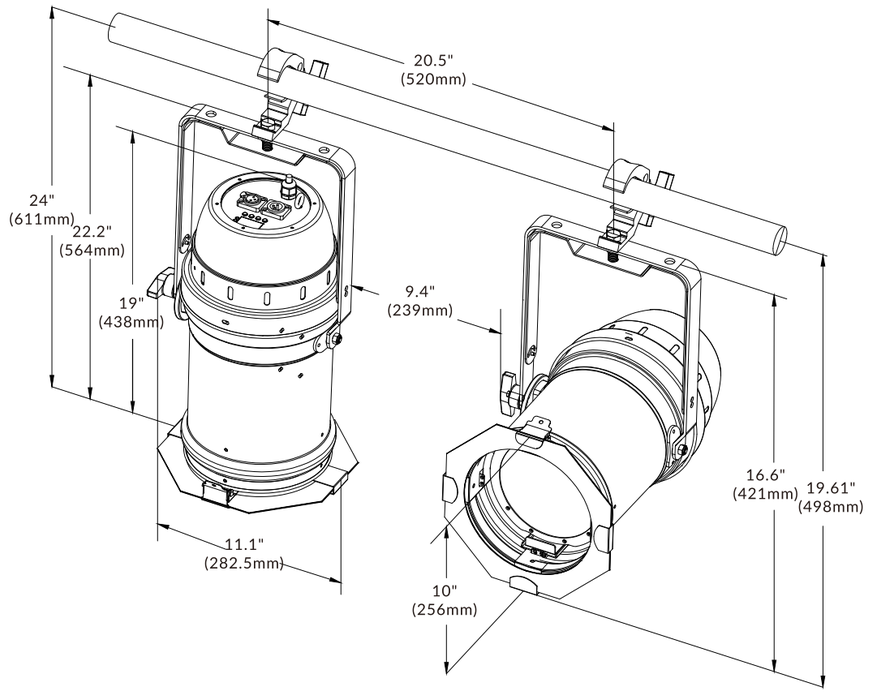

CONCERT / TOURING

CONCERT / TOURING